US005220130A

United States Patent [19]

Walters

[11] Patent Number: 5,220,130

[45] Date of Patent: Jun. 15, 1993

[54] DUAL INSULATED DATA CABLE

[75] Inventor: Jack Walters, Milford, Mass.

[73] Assignee: Cooper Industries, Inc., Houston, Tex.

[21] Appl. No.: 740,792

[22] Filed: Aug. 6, 1991

[51] Int. Cl.[5] H01B 7/34

[52] U.S. Cl. ..... 174/36; 174/113 R; 174/115; 174/116; 174/120 SR

[58] Field of Search ..... 174/36, 115, 113 R, 174/116, 110 FC, 110 F, 120 SR, 120 R

[56] References Cited

U.S. PATENT DOCUMENTS

2,623,093	12/1952	Smith	174/115
3,023,267	2/1962	Rubinstein et al.	174/115
3,040,278	6/1962	Griemsmann	174/110 F
3,191,005	6/1965	Cox, II	174/120 R
3,529,340	9/1970	Polizzano et al.	174/110 F
3,634,607	1/1972	Coleman	174/113 R X
3,816,644	6/1974	Giffel et al.	174/115
3,867,565	2/1975	Prentice et al.	174/110 F X
3,986,253	10/1976	Harris	174/110 F X
4,304,713	12/1981	Perelman	264/45.9
4,330,685	5/1982	Bleikamp, Jr.	174/110 F X
4,532,375	7/1985	Weitzel et al.	174/110 FC X
4,604,497	8/1986	Bell et al.	174/110 F
4,638,114	1/1987	Mori	174/36
4,701,576	10/1987	Wada et al.	174/117 F
4,707,569	11/1987	Yoshimura et al.	174/116
4,711,811	12/1987	Randa	174/110 F X
5,059,483	10/1991	Lunk et al.	174/110 F X

Primary Examiner—Morris H. Nimmo

Attorney, Agent, or Firm—Laff, Whitesel, Conte & Saret

[57] ABSTRACT

Existing electrical cables (such as low speed data, low or high speed computer or telephone cables) employ connectors having holes or other openings for receiving the insulation or requiring conductors having a precise pitch. For example, a mechanical part of the connector may close over the received cables, piercing the insulation and making an electrical contact with the conductor inside the insulation. Or, the insulation may also be used to provide the spacing required for mass termination of insulation such as connectors which require a specified pitch. This dimension or pitch is supplied by the inner insulation while the outer insulation supplies the dimension required to meet the impedance/capacitance requirements of the electrical circuits involved. The modern high speed data cables must have substantially more insulation so that the capacitive loading or impedance match of the wire is at an acceptable level. With the increase in insulation, the cable does not fit into the holes or other openings of the existing connectors. The invention solves the resulting problem by providing two coaxial jackets of insulation which meets the high speed data transmission needs or extends the transmission or distance and yet the outer jacket may be stripped away so that the remaining inner jacket fits the existing connectors.
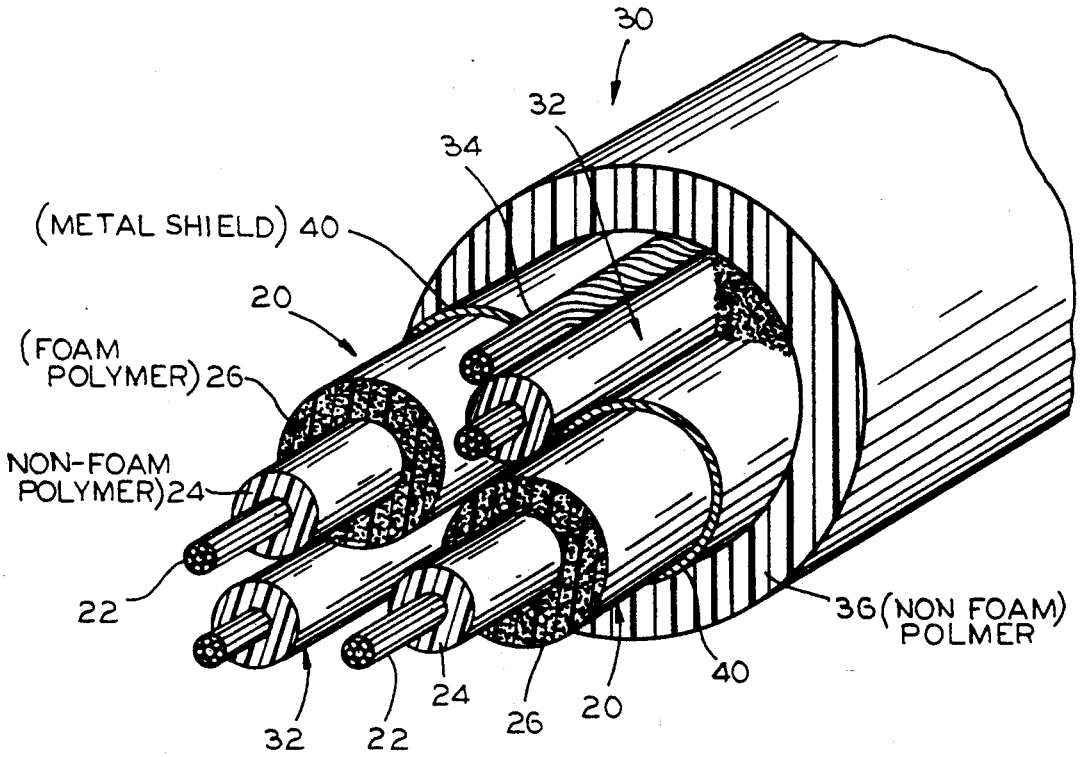
10 Claims, 1 Drawing Sheet