US009411030B2

(12) **United States Patent**
Weinberg

(10) **Patent No.: US 9,411,030 B2**
(45) **Date of Patent: Aug. 9, 2016**

(54) **APPARATUS AND METHOD FOR DECREASING BIO-EFFECTS OF MAGNETIC GRADIENT FIELD GRADIENTS**

(75) Inventor: **Irving N. Weinberg**, Bethesda, MD (US)

(73) Assignee: **WEINBERG MEDICAL PHYSICS LLC**, Bethesda, MD (US)

(*) Notice: Subject to any disclaimer, the term of this patent is extended or adjusted under 35 U.S.C. 154(b) by 959 days.

(21) Appl. No.: **13/439,382**

(22) Filed: **Apr. 4, 2012**

(65) **Prior Publication Data**

US 2012/0223711 A1 Sep. 6, 2012

Related U.S. Application Data

(63) Continuation-in-part of application No. 12/488,105, filed on Jun. 19, 2009, now Pat. No. 8,154,286.

(60) Provisional application No. 61/074,397, filed on Jun. 20, 2008.

(51) **Int. Cl.**

G01V 3/00	(2006.01)
G01R 33/385	(2006.01)
G01R 33/28	(2006.01)

(52) **U.S. Cl.**

CPC ***G01R 33/3852*** (2013.01); *G01R 33/288* (2013.01)

(58) **Field of Classification Search**

USPC 324/300–322; 600/407–435; 382/128–131

See application file for complete search history.

(56) **References Cited**

U.S. PATENT DOCUMENTS

5,145,163	A	9/1992	Cowan et al.	
5,442,290	A	8/1995	Crooks	324/309
6,150,821	A	11/2000	Mori et al.	324/322
6,704,594	B1	3/2004	Blank et al.	600/423
7,859,260	B2	12/2010	Reiderman	324/303
8,154,286	B2 *	4/2012	Weinberg	324/309
8,466,680	B2 *	6/2013	Weinberg et al.	324/318
8,836,329	B2 *	9/2014	Weinberg	324/307
2009/0149735	A1	6/2009	Fallone et al.	600/411

(Continued)

FOREIGN PATENT DOCUMENTS

EP	2294436	A1 *	3/2011
JP	2-46827		2/1990
WO	WO 2009155522	A1 *	12/2009

OTHER PUBLICATIONS

Notification Of Transmittal Of The International Search Report And The Written Opinion Of The International Searching Authority, Or The Declaration For PCT/US2009/047960, Filed Jun. 19, 2009.

(Continued)

Primary Examiner — Louis Arana

(74) *Attorney, Agent, or Firm* — Barnes & Thornburg LLP

(57) **ABSTRACT**

An apparatus and a method for increasing the magnitude of the magnetic gradient for MRI without causing nerve stimulation. As an example, the short ramp time of magnetic gradients, for example less than 150 microseconds is contemplated. These short ramp-time magnetic gradients are used for the imaging of structures with short relaxations times, such as teeth, without causing nerve stimulation. The apparatus comprises a generator of magnetic gradients of at least 1 milliTeslas in magnitude with at least one gradient ramp time shorter than 150 microseconds and which induces no peripheral nerve stimulation.
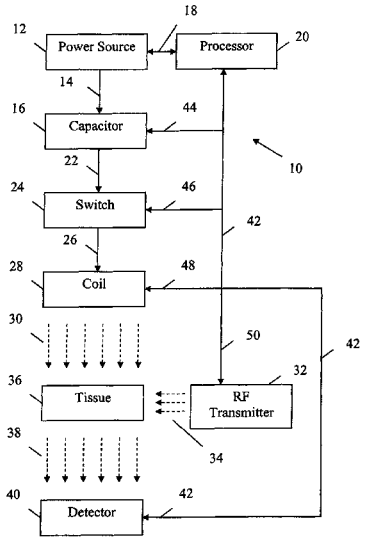
9 Claims, 10 Drawing Sheets