US009410430B2

(12) **United States Patent**
Haskin

(10) **Patent No.: US 9,410,430 B2**
(45) **Date of Patent: Aug. 9, 2016**

(54) **TURBINE APPARATUS WITH COUNTER-ROTATING BLADES**

(71) Applicant: **Jay Haskin**, Bryan, TX (US)

(72) Inventor: **Jay Haskin**, Bryan, TX (US)

(*) Notice: Subject to any disclaimer, the term of this patent is extended or adjusted under 35 U.S.C. 154(b) by 177 days.

(21) Appl. No.: **14/308,899**

(22) Filed: **Jun. 19, 2014**

(65) **Prior Publication Data**

US 2015/0369250 A1 Dec. 24, 2015

(51) **Int. Cl.**

F04D 19/02	(2006.01)
F01D 5/03	(2006.01)
F01D 1/24	(2006.01)
F02C 3/067	(2006.01)
F01D 5/02	(2006.01)

(52) **U.S. Cl.**

CPC .. ***F01D 5/03*** (2013.01); ***F01D 1/24*** (2013.01); ***F02C 3/067*** (2013.01); *F01D 5/022* (2013.01); *F05D 2220/31* (2013.01)

(58) **Field of Classification Search**

CPC F04D 19/024; F01D 1/24; F01D 15/12; F01D 25/162; F01D 25/30; F02C 7/32; F02C 3/107; F02K 3/072; F03B 3/145; F03D 1/025; F03D 1/04; F03D 9/002

See application file for complete search history.

(56) **References Cited**

U.S. PATENT DOCUMENTS

828,618	A *	8/1906	Marichal	F01D 17/205 415/44
3,524,318	A *	8/1970	Bouiller	F02C 3/067 415/60
3,673,802	A *	7/1972	Krebs	F02C 3/067 415/79
4,159,624	A *	7/1979	Gruner	F02C 3/107 60/268
4,648,788	A	3/1987	Jochum	
4,790,133	A *	12/1988	Stuart	F02K 3/072 415/65
4,860,537	A *	8/1989	Taylor	F02C 3/067 415/65
4,969,325	A	11/1990	Adamson et al.	
6,278,197	B1	8/2001	Appa	
7,195,446	B2	3/2007	Seda et al.	
7,290,386	B2	11/2007	Orlando et al.	
7,451,592	B2	11/2008	Taylor et al.	
8,393,853	B2	3/2013	Sauer et al.	
2006/0090451	A1 *	5/2006	Moniz	F01D 1/24 60/226.1
2011/0000222	A1 *	1/2011	Black	F02C 7/20 60/796
2012/0049523	A1	3/2012	Bersiek	
2013/0219859	A1	8/2013	Suciu et al.	
2013/0223993	A1 *	8/2013	Merry	F01D 1/24 415/122.1
2013/0230380	A1	9/2013	Allouche et al.	

* cited by examiner

Primary Examiner — Igor Kershteyn
(74) *Attorney, Agent, or Firm* — Egbert Law Offices, PLLC

(57) **ABSTRACT**

A turbine apparatus has a main shaft, a first set of blades mounted to the main shaft, a second set of blades, and a barrel affixed to a periphery of the second set of blades. The barrel is rotatably mounted independent of a rotation of the main shaft. The barrel and the second set of blades rotates in a direction opposite to the direction of rotation of the first set of blades and the main shaft. A third set of blades is mounted to the main shaft such that the second set of blades is interposed between the first and third sets of blades. An outer shell extends over and an outer surface of the barrel such that the barrel is rotatable interior of the outer shell.
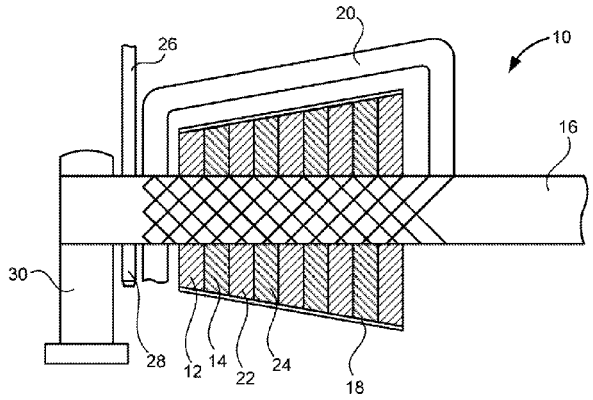
12 Claims, 4 Drawing Sheets