US009610030B2

(12) **United States Patent**
Proud

(10) **Patent No.: US 9,610,030 B2**
(45) **Date of Patent: Apr. 4, 2017**

(54) **ROOM MONITORING DEVICE AND SLEEP ANALYSIS METHODS**

(71) Applicant: **Hello Inc.**, San Francisco, CA (US)

(72) Inventor: **James Proud**, San Francisco, CA (US)

(73) Assignee: **Hello Inc.**, San Francisco, CA (US)

(*) Notice: Subject to any disclaimer, the term of this patent is extended or adjusted under 35 U.S.C. 154(b) by 146 days.

(21) Appl. No.: **14/604,566**

(22) Filed: **Jan. 23, 2015**

(65) **Prior Publication Data**

US 2016/0213308 A1 Jul. 28, 2016

(51) **Int. Cl.**
A61B 5/00 (2006.01)
A61B 5/11 (2006.01)
(Continued)

(52) **U.S. Cl.**
CPC ***A61B 5/1123*** (2013.01); ***A61B 5/0002*** (2013.01); ***A61B 5/1118*** (2013.01); ***A61B 5/4806*** (2013.01); ***G06F 3/017*** (2013.01); *A61B 5/742* (2013.01); *A61B 5/7405* (2013.01); *A61B 2090/309* (2016.02); *A61B 2560/0252* (2013.01); *A61B 2560/0475* (2013.01); *A61B 2562/0204* (2013.01); *A61B 2562/029* (2013.01); *A61B 2562/0219* (2013.01); *A61B 2562/0257* (2013.01); *H04M 2250/12* (2013.01)

(58) **Field of Classification Search**
CPC A61B 5/11; A61B 5/1112; A61B 5/1113; A61B 5/1115; A61B 5/1123; A61B 5/1118; A61B 5/0002; A61B 5/4806; A61B 5/7405; A61B 5/742; A61B 2250/12; A61B 2562/0257; A61B 2562/0204; A61B 2562/0219; A61B 2560/0252; A61B 2560/0475; A61B 2090/017; A61F 3/017
See application file for complete search history.

(56) **References Cited**

U.S. PATENT DOCUMENTS

3,127,363 A 3/1964 Nitzsche et al.
3,715,334 A 2/1973 Karstedt
(Continued)

FOREIGN PATENT DOCUMENTS

DE 3839900 5/1990
EP 0183553 6/1986
(Continued)

OTHER PUBLICATIONS

Davida, G.I., et al., "On enabling secure applications through off-line biometric identification", Proceedings of the IEEE Symposium on Security and Privacy (May 1998).
(Continued)

Primary Examiner — Max Hindenburg
(74) *Attorney, Agent, or Firm* — Paul Davis

(57) **ABSTRACT**

A method monitors a person's sleep parameters, sleep activities, sleep state, or awake status sleep. At least one of a person's motion, movement and gesture is detected for determining a person's sleep parameters, sleep activities, sleep state, or awake status. The at least one of a person's motion, movement and gesture is communicated to a user monitoring device that includes at least two elements selected from: a proximity sensor; a temperature sensor/humidity sensor; a particulate sensor; a light sensor; a microphone; a speaker; two RF transmitters (BLE/ANT+WIFI); a memory card; and LED's.
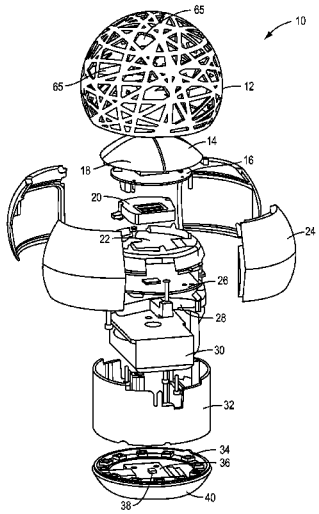
12 Claims, 48 Drawing Sheets