US009409630B1

(12) **United States Patent**
Day

(10) **Patent No.: US 9,409,630 B1**
(45) **Date of Patent: Aug. 9, 2016**

(54) **DOOR SYSTEMS AND METHODS FOR BOATS**

(71) Applicant: **Thomas M Day**, Bellingham, WA (US)

(72) Inventor: **Thomas M Day**, Bellingham, WA (US)

(*) Notice: Subject to any disclaimer, the term of this patent is extended or adjusted under 35 U.S.C. 154(b) by 0 days.

(21) Appl. No.: **14/746,672**

(22) Filed: **Jun. 22, 2015**

(51) **Int. Cl.**
B63B 17/00 (2006.01)
B63B 21/24 (2006.01)
B63B 27/14 (2006.01)
B63B 21/26 (2006.01)

(52) **U.S. Cl.**
CPC ***B63B 21/243*** (2013.01); ***B63B 21/26*** (2013.01); ***B63B 27/143*** (2013.01)

(58) **Field of Classification Search**
CPC B63B 27/00; B63B 27/14; B63B 27/143; B63B 2027/00; B63B 2027/14; B63B 2027/143; B63B 21/243; B63B 21/26
USPC 114/60, 70, 72, 116, 117, 230.1, 294, 114/295, 362, 364
See application file for complete search history.

(56) **References Cited**

U.S. PATENT DOCUMENTS

2,341,866 A * 2/1944 Higgins B63B 27/143 114/290
2,476,319 A * 7/1949 Norris B63B 21/26 114/230.1
3,468,280 A * 9/1969 Williams B63B 27/143 114/72
4,158,416 A * 6/1979 Podesta B63B 19/08 114/72
4,293,967 A * 10/1981 Ord B63B 27/14 114/362
4,681,054 A * 7/1987 Rice B63G 13/00 114/124
5,191,854 A * 3/1993 Lehmann B63B 19/08 114/291
6,067,926 A * 5/2000 Robinson B63B 21/00 114/263
6,223,669 B1 * 5/2001 Bowden ..... B63B 3/04 114/65 R
6,792,886 B1 9/2004 Maloney et al.
7,621,230 B1 * 11/2009 Anderson B63B 27/143 114/258
7,712,727 B1 * 5/2010 Cole ..... B66D 1/36 114/67 A
2002/0164231 A1 11/2002 Lucas et al.
2007/0163484 A1 7/2007 Eng et al.
2014/0158038 A1 * 6/2014 Johnston B63B 27/143 114/355

* cited by examiner

Primary Examiner — Daniel V Venne
(74) *Attorney, Agent, or Firm* — Dwayne E. Rogge; Schacht Law Office, Inc.

(57) **ABSTRACT**

Disclosed herein is a bow ramp for a water vessel (boat) wherein the bow ramp is configured to rotate/pivot to an open position to allow passage from within a hull of the vessel to a shore. The bow ramp is operated in combination with shore penetrating spikes which penetrate a shore or seabed (river-bed, lakebed, etc.) and include a user-actuated shore-engaging spike rotation mechanism which allows a user to move the water vessel further up the shore or alternatively away from the shore.
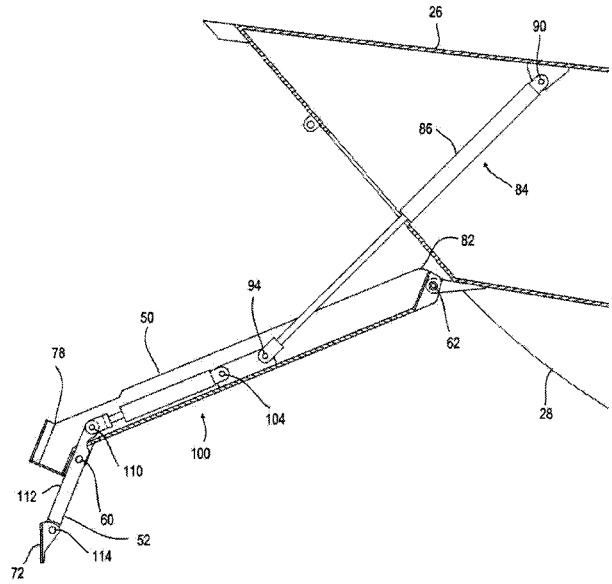
5 Claims, 8 Drawing Sheets