US009409130B2

(12) **United States Patent**
Lee et al.

(10) **Patent No.: US 9,409,130 B2**
(45) **Date of Patent: Aug. 9, 2016**

(54) **SUBMERGED TYPE HOLLOW FIBER MEMBRANE MODULE AND METHOD FOR MANUFACTURING THE SAME**

(75) Inventors: **Moo-Seok Lee**, Seoul (KR); **Sung-Hak Choi**, Suwon-si (KR)

(73) Assignee: **KOLON INDUSTRIES, INC.**, Kwacheon-si (KR)

(*) Notice: Subject to any disclaimer, the term of this patent is extended or adjusted under 35 U.S.C. 154(b) by 0 days.

(21) Appl. No.: **12/581,495**

(22) Filed: **Oct. 19, 2009**

(65) **Prior Publication Data**

US 2010/0038301 A1 Feb. 18, 2010

Related U.S. Application Data

(63) Continuation of application No. PCT/KR2008/002284, filed on Apr. 23, 2008.

(30) **Foreign Application Priority Data**

Apr. 25, 2007 (KR) 10-2007-0040261
Dec. 14, 2007 (KR) 10-2007-0130855

(51) **Int. Cl.**
B01D 63/02 (2006.01)

(52) **U.S. Cl.**
CPC ***B01D 63/022*** (2013.01); ***B01D 63/023*** (2013.01); ***B01D 63/024*** (2013.01); *B01D 2315/06* (2013.01); *Y10T 156/10* (2015.01)

(58) **Field of Classification Search**
None
See application file for complete search history.

(56) **References Cited**

U.S. PATENT DOCUMENTS

6,592,759	B2	7/2003	Rabie et al.	
6,685,832	B2	2/2004	Mahendran et al.	
2002/0153299	A1 *	10/2002	Mahendran et al.	210/321.89
2003/0038075	A1	2/2003	Akimoto et al.	

FOREIGN PATENT DOCUMENTS

EP	1 350 555	A1	10/2003
JP	2003-112016	A	4/2003
KR	10-2004-0102204	A	12/2004

OTHER PUBLICATIONS

Performance plastics technical data sheet, date unknown.*
Korean Patent Office, Korean Office Action issued in corresponding KR Application No. 10-2007-0130855, dated Jun. 21, 2013.

* cited by examiner

Primary Examiner — Krishnan S Menon
(74) *Attorney, Agent, or Firm* — Sughrue Mion, PLLC

(57) **ABSTRACT**

A submerged-type hollow fiber membrane module and a method for manufacturing the same are disclosed, which is capable of realizing a great sealing strength between a module case and a bundle of hollow fiber membranes without an additional centrifugal molding apparatus. The method includes forming a bundle of hollow fiber membranes held together and fixed by a first potting material, wherein one end of each of the hollow fiber membranes is open; putting the bundle of hollow fiber membranes in a module case and fixing the bundle of hollow fiber membranes in the module case by forming a second potting material on the first potting material.
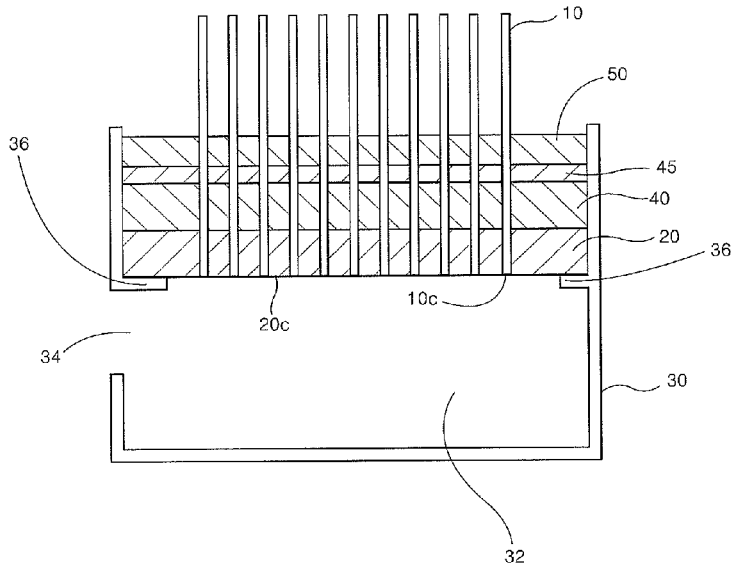
4 Claims, 9 Drawing Sheets