April 26, 1955 P. C. JANSEN 2,706,930

PROJECTION SCREEN

Filed Aug. 4, 1948 4 Sheets-Sheet 1

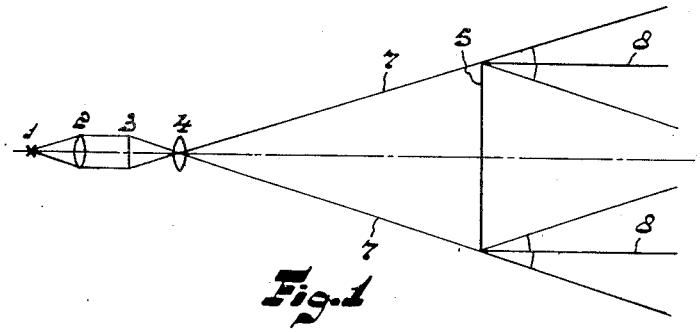

Fig. 1

Fig. 2

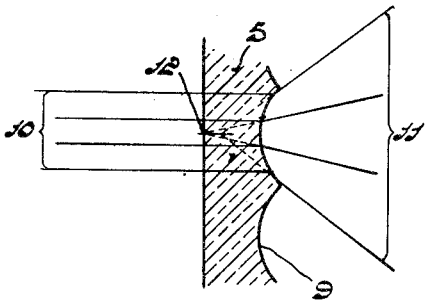

Fig. 3

PIETER CORNELIS JANSEN
INVENTOR

BY Fred M. Vogel
AGENT