US009001030B2

(12) **United States Patent**
Raffle et al.

(10) **Patent No.: US 9,001,030 B2**
(45) **Date of Patent: Apr. 7, 2015**

(54) **HEADS UP DISPLAY**

(75) Inventors: **Hayes S. Raffle**, Palo Alto, CA (US); **Chia-Jean Wang**, Palo Alto, CA (US)

(73) Assignee: **Google Inc.**, Mountain View, CA (US)

(*) Notice: Subject to any disclaimer, the term of this patent is extended or adjusted under 35 U.S.C. 154(b) by 453 days.

(21) Appl. No.: **13/397,459**

(22) Filed: **Feb. 15, 2012**

(65) **Prior Publication Data**

US 2013/0207887 A1 Aug. 15, 2013

(51) **Int. Cl.**
G06F 3/01 (2006.01)
G02B 27/00 (2006.01)

(52) **U.S. Cl.**
CPC ***G02B 27/00*** (2013.01); ***G06F 3/013*** (2013.01)

(58) **Field of Classification Search**
CPC G02B 2027/0138
See application file for complete search history.

(56) **References Cited**

U.S. PATENT DOCUMENTS

4,711,512	A	12/1987	Upatnieks	
5,076,664	A	12/1991	Migozzi	
5,886,822	A *	3/1999	Spitzer	359/630
5,896,232	A	4/1999	Budd et al.	
6,222,677	B1	4/2001	Budd et al.	
6,690,516	B2	2/2004	Aritake et al.	
6,715,878	B1	4/2004	Gobbi et al.	
6,738,535	B2	5/2004	Kanevsky et al.	
6,747,611	B1	6/2004	Budd et al.	
6,880,931	B2	4/2005	Moliton et al.	
2004/0174496	A1 *	9/2004	Ji et al.	351/209
2010/0157433	A1	6/2010	Mukawa et al.	
2010/0202048	A1 *	8/2010	Amitai et al.	359/487
2011/0213664	A1	9/2011	Osterhout et al.	
2013/0021658	A1 *	1/2013	Miao et al.	359/256
2013/0044130	A1 *	2/2013	Geisner et al.	345/633
2013/0128364	A1 *	5/2013	Wheeler et al.	359/630
2013/0162505	A1 *	6/2013	Crocco et al.	345/7

FOREIGN PATENT DOCUMENTS

JP	2003-230539	A	8/2003
WO	WO 2011/114092	A1	9/2011

OTHER PUBLICATIONS

PCT/US2013/021593; PCT International Search Report and Written Opinion of the International Searching Authority, mailed Apr. 30, 2013, 12 pages.
PCT/US2013/021593; PCT International Preliminary Report on Patentability, mailed Aug. 28, 2014, 11 pages.

* cited by examiner

Primary Examiner — Seokyun Moon
Assistant Examiner — Peijie Shen
(74) *Attorney, Agent, or Firm* — Blakely Sokoloff Taylor & Zafman LLP

(57) **ABSTRACT**

Embodiments of an apparatus comprising a light guide including a proximal end, a distal end, a display positioned near the proximal end, an eye-tracking camera positioned at or near the proximal end to image eye-tracking radiation, a proximal optical element positioned in the light guide near the proximal end and a distal optical element positioned in the light guide near the distal end. The proximal optical element is optically coupled to the display, the eye-tracking camera and the distal optical element and the distal optical element is optically coupled to the proximal optical element, the ambient input region and the input/output region. Other embodiments are disclosed and claimed.
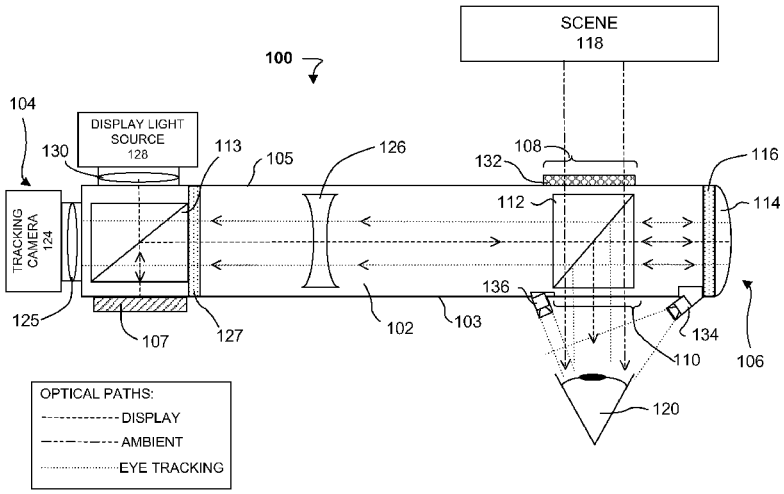
37 Claims, 7 Drawing Sheets