US010000930B2

(12) **United States Patent**
Lowe et al.

(10) **Patent No.: US 10,000,930 B2**
(45) **Date of Patent: Jun. 19, 2018**

(54) **SPACED VENT FOR METAL ROOFS**

(71) Applicant: **Cor-A-Vent, Inc.**, Mishawaka, IN (US)

(72) Inventors: **Steven E. Lowe**, South Bend, IN (US); **Carl Zimmerman**, Shiloh, OH (US)

(73) Assignee: **Cor-A-Vent, Inc.**, Mishawaka, IN (US)

(*) Notice: Subject to any disclaimer, the term of this patent is extended or adjusted under 35 U.S.C. 154(b) by 28 days.

(21) Appl. No.: **15/170,478**

(22) Filed: **Jun. 1, 2016**

(65) **Prior Publication Data**

US 2017/0350127 A1 Dec. 7, 2017

(51) **Int. Cl.**

F24F 7/02	(2006.01)
F24F 13/08	(2006.01)
E04D 1/30	(2006.01)

(52) **U.S. Cl.**

CPC ***E04D 1/30*** (2013.01); ***F24F 7/02*** (2013.01); *E04D 2001/305* (2013.01); *E04D 2001/309* (2013.01)

(58) **Field of Classification Search**

CPC E04D 13/36; E04D 13/174; E04D 13/176; E04D 13/402; F24F 7/02; F24F 13/08

USPC 55/385.1, 524, 529; 52/198, 199, 309.5, 52/518; 454/365, 366, 364, 367

See application file for complete search history.

(56) **References Cited**

U.S. PATENT DOCUMENTS

3,777,649	A	12/1973	Luckey	
3,828,494	A	8/1974	Uhrhane et al.	
5,288,269	A *	2/1994	Hansen	E04D 13/174 454/365
5,352,154	A	10/1994	Rotter et al.	
6,105,314	A	8/2000	Stocksieker	
6,491,581	B1 *	12/2002	Mankowski	E04D 13/174 454/365
6,537,147	B2 *	3/2003	Smith	E04D 1/3402 454/365
6,599,184	B2	7/2003	Morris	
6,773,342	B2 *	8/2004	Rotter	E04D 13/174 454/365
6,997,800	B1 *	2/2006	Kohler	E04D 13/174 454/365
7,788,857	B2	9/2010	Spengler et al.	
9,151,059	B2	10/2015	Pavlansky et al.	
2001/0052207	A1	12/2001	Davis	
2006/0280911	A1	12/2006	Verkamp	
2008/0034685	A1 *	2/2008	Ogletree	E04D 13/176 52/198
2008/0236076	A1 *	10/2008	Hofmann	E04D 1/36 52/309.5
2012/0047828	A1 *	3/2012	Bahn	E04D 13/174 52/199

(Continued)

Primary Examiner — Robert A Hopkins
Assistant Examiner — Minh-Chau Pham
(74) *Attorney, Agent, or Firm* — Faegre Baker Daniels LLP

(57) **ABSTRACT**

A roof ventilation system is provided that is configured to be mounted on a profiled paneled roof for venting air from a vent opening in the roof. The roof ventilation system can include a vent part having a plurality of vent passages, a plurality of plies configured to be mounted substantially horizontal to the profiled roof panels and a plurality of cross members extending between each ply, wherein the plies and cross members define the vent passages; and a filter member attached to outer surfaces of the vent part. The filter member can be made from a resilient material, and the filter member may include extensions extending beyond a length of the vent part.
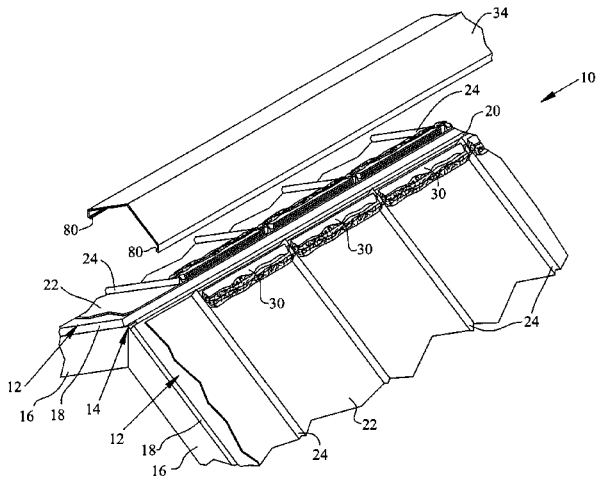
17 Claims, 7 Drawing Sheets