US008581729B2

(12) **United States Patent**
Rice et al.

(10) **Patent No.: US 8,581,729 B2**
(45) **Date of Patent: *Nov. 12, 2013**

(54) **GATEWAY RADIO FREQUENCY IDENTIFICATION TAG SYSTEM**

(75) Inventors: **Christopher Rice**, Parsippany, NJ (US); **Thomas Killian**, Westfield, NJ (US)

(73) Assignee: **AT&T Intellectual Property II, L.P.**, Atlanta, GA (US)

(*) Notice: Subject to any disclaimer, the term of this patent is extended or adjusted under 35 U.S.C. 154(b) by 90 days.

This patent is subject to a terminal disclaimer.

(21) Appl. No.: **13/453,773**

(22) Filed: **Apr. 23, 2012**

(65) **Prior Publication Data**

US 2012/0206241 A1 Aug. 16, 2012

Related U.S. Application Data

(63) Continuation of application No. 13/042,402, filed on Mar. 7, 2011, now Pat. No. 8,164,459, which is a continuation of application No. 11/999,398, filed on Dec. 5, 2007, now Pat. No. 7,902,985.

(51) **Int. Cl.**
G08B 13/14 (2006.01)

(52) **U.S. Cl.**
USPC **340/572.4**; 340/825.49; 340/539.1

(58) **Field of Classification Search**
USPC 340/572.4, 568.1, 825.49, 10.1, 340/572.1–572.3, 572.5–572.9, 539.1, 505, 340/5.92, 539.13
See application file for complete search history.

(56) **References Cited**

U.S. PATENT DOCUMENTS

7,068,148	B2	6/2006	Shanks et al.	
7,081,818	B2 *	7/2006	Eckstein et al.	340/572.1
7,295,108	B2	11/2007	Corrado et al.	
7,561,044	B2 *	7/2009	Braun et al.	340/572.1
7,573,386	B2	8/2009	Lahiri	
7,633,392	B2	12/2009	Neuwirth	
7,667,591	B2 *	2/2010	Olsen et al.	340/539.1
7,812,725	B2 *	10/2010	Bolander et al.	340/572.1
7,902,985	B2 *	3/2011	Rice et al.	340/572.4
7,978,060	B2 *	7/2011	Mandava et al.	340/539.1
8,164,459	B2 *	4/2012	Rice et al.	340/572.4
2005/0078006	A1 *	4/2005	Hutchins et al.	340/561
2006/0145815	A1 *	7/2006	Lanzieri et al.	340/10.2
2008/0297312	A1	12/2008	Moshfeghi	
2009/0021343	A1	1/2009	Sinha	

* cited by examiner

Primary Examiner — Daniel Previl

(57) **ABSTRACT**

A system and method are disclosed for transporting deterministic traffic in a gigabit passive optical network. A system that incorporates teachings of the present disclosure may include, for example, an Optical Line Termination (OLT) for exchanging data traffic in a Gigabit Passive Optical Network (GPON) having a controller programmed to generate a timeslot schedule for transport of a desired bandwidth of constant bit rate (CBR) data traffic by selecting one or more timeslots from periodic frame clusters operating according to a GPON Transmission Convergence (GTC) protocol. Additional embodiments are disclosed.
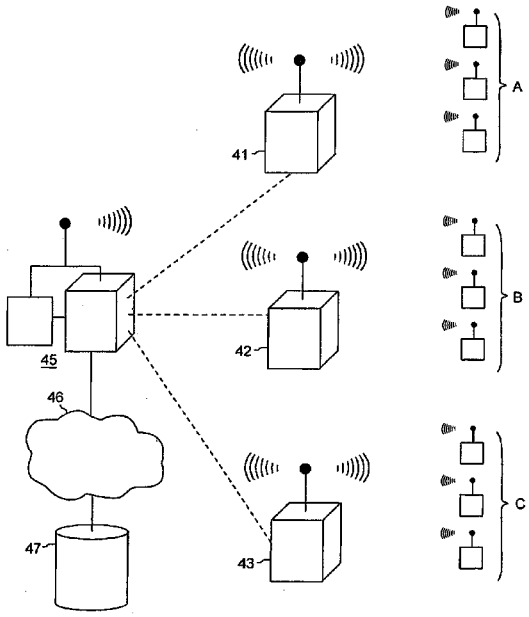
20 Claims, 3 Drawing Sheets