United States Patent [19]

Poler

[11] **4,377,329**

[45] **Mar. 22, 1983**

[54] **CONTACT LENS OR THE LIKE**

[76] Inventor: **Stanley Poler,** 78 E. Second St., New York, N.Y. 10003

[21] Appl. No.: **124,941**

[22] Filed: **Feb. 26, 1980**

[51] **Int. Cl.**[3] **G02C 7/04**

[52] **U.S. Cl.** ..... **351/160 R**

[58] **Field of Search** ..... 351/160 H, 160 R, 161, 351/177; 3/13, 13 A

[56] **References Cited**

U.S. PATENT DOCUMENTS

3,594,074	7/1971	Rosen	351/160 R
3,973,838	8/1976	Page	351/160 H
4,080,709	3/1978	Poler	3/13 A
4,095,878	6/1978	Fanti	351/161
4,122,556	10/1978	Poler	3/13 A
4,126,904	11/1978	Shepard	351/160 R
4,171,878	10/1979	Kivaev et al.	351/160 H
4,332,443	6/1982	Thomas	351/160 H

FOREIGN PATENT DOCUMENTS

908135	8/1945	France	351/160 R
946877	12/1948	France	351/160 H

Primary Examiner—John K. Corbin
Assistant Examiner—Scott J. Sugarman
Attorney, Agent, or Firm—Hopgood, Calimafde, Kalil, Blaustein & Judlowe

[57] **ABSTRACT**

The invention contemplates improved extraocular-lens structures for contact with the cornea of a human eye, to be worn in place of spectacles. The construction features a lens element of requisite prescription power but of diameter which substantially equals or only slightly exceeds the fully dilated pupil size of the wearer, and fenestrated haptic structure engaged to the lens extends radially outwardly and is so thin and axially compliant as to be self-conforming to the curvature of the cornea and to effectively adhere thereto, thus stabilizing the lens for retention of its position on the optical axis of the eye.
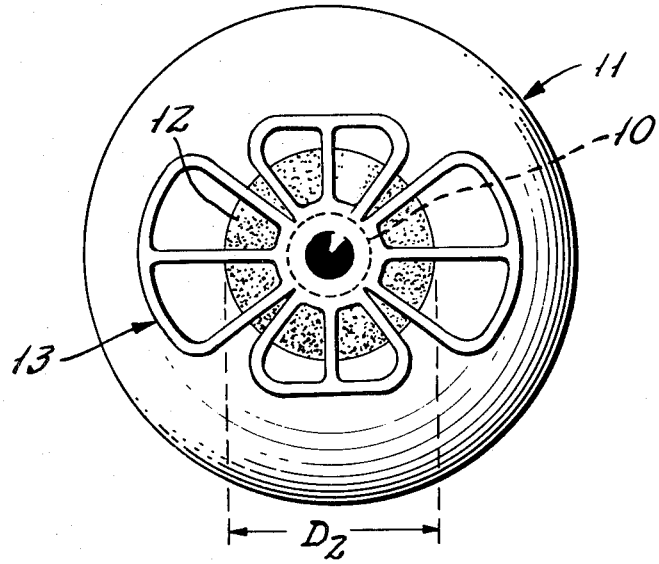
33 Claims, 13 Drawing Figures