US005770029A

United States Patent [19]

Nelson et al.

[11] **Patent Number: 5,770,029**

[45] **Date of Patent: Jun. 23, 1998**

[54] **INTEGRATED ELECTROPHORETIC MICRODEVICES**

[75] Inventors: **Robert J. Nelson**, Alameda; **Herbert H. Hooper**, Belmont, both of Calif.; **James Landers**, Rochester, Minn.

[73] Assignee: **Soane Biosciences**, Hayward, Calif.

[21] Appl. No.: **690,307**

[22] Filed: **Jul. 30, 1996**

[51] **Int. Cl.**[6] **G01N 27/26**; G01N 27/447

[52] **U.S. Cl.** **204/604**; 204/453

[58] **Field of Search** 204/453, 604

[56] **References Cited**

U.S. PATENT DOCUMENTS

4,908,112	3/1990	Pace	210/198.2
5,126,022	6/1992	Soane et al.	204/458
5,132,012	7/1992	Miura et al.	210/198.2
5,296,114	3/1994	Manz	204/451
5,318,680	6/1994	Fishman et al.	204/453
5,423,966	6/1995	Wiktorowicz	204/453

FOREIGN PATENT DOCUMENTS

5164737	6/1993	Japan	204/43.3
WO93/05390	3/1993	WIPO .	

OTHER PUBLICATIONS

Harrison et al, "Micromachining a Miniaturized Capillary Electrophoresis–Based Chemical Analysis System on a Chip," Science No month available (1992) 261: 895.

Jacobsen et al., "Precolumn Reactions with Electrophoretic Analysis Integrated on a Microchip," Anal. Chem. (1994) 66:4127–4132.

Effenhauser et al., "High–Speed Separation of Antisense Oligonucleotides on a Micromachined Capillary Electrophoresis Device," Anal. Chem. No month available (1994) 66:2949.

Tomlinson et al., "Enhancement of Concentration Limits of Detection in CE and CE–MS: A Review of On–Line Sample Extraction, Cleanup, Analyte Preconcentration, and Microreactor Technology," J. Cap. Elec. No month available (1995) 2: 247–266.

Beckers & Ackermans, The Effect of Sample Stacking for High Performance Capillary Electrophoresis J. Chromatogr. No month available (1993) 629: 371–378.

Chien & Burgi, "Field Amplified Sample Injection in High–Performance Capillary Electrophoresis," J. Chromatogr. No month avalialbe (1991) 559: 141–152.

Stegehuis et al., "Isotachophoresis as an On–Line Concentration Pretreatment Technique in Capillary Electrophoresis," J. Chromatogr. No month available (1991) 538: 393–402.

Kasicka & Prusik, "Isotachophoretic Electrodesorption of Proteins from an Affinity Adsorbent on a Microscale," J. Chromatogr. No month available (1983) 273:117128.

Cai & El Rassi, "On–Line Preconcentration of Triazine Herbicides with Tandem Octadecyl Capillaries–Capillary Zone Electrophoresis," J. Liq. Chromatogr. No month available (1992) 15:1179–1192.

(List continued on next page.)

Primary Examiner—Kathryn L. Gorgos
Assistant Examiner—John S. Starsiak, Jr.
Attorney, Agent, or Firm—Flehr Hohbach Test Albritton & Herbert LLP

[57] **ABSTRACT**

Integrated electrophoretic microdevices comprising at least an enrichment channel and a main electrophoretic flowpath are provided. In the subject integrated devices, the enrichment channel and the main electrophoretic flowpath are positioned so that waste fluid flows away from said main electrophoretic flowpath through a discharge outlet. The subject devices find use in a variety of electrophoretic applications, including clinical assays.
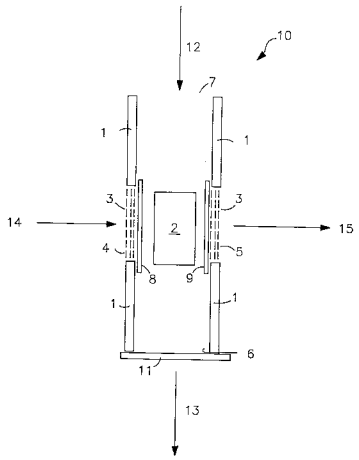
14 Claims, 5 Drawing Sheets