Feb. 20, 1968 C. A. STOPPER 3,369,729

COLLAPSIBLE CONTAINER

Filed Dec. 27, 1965

FIG. 1

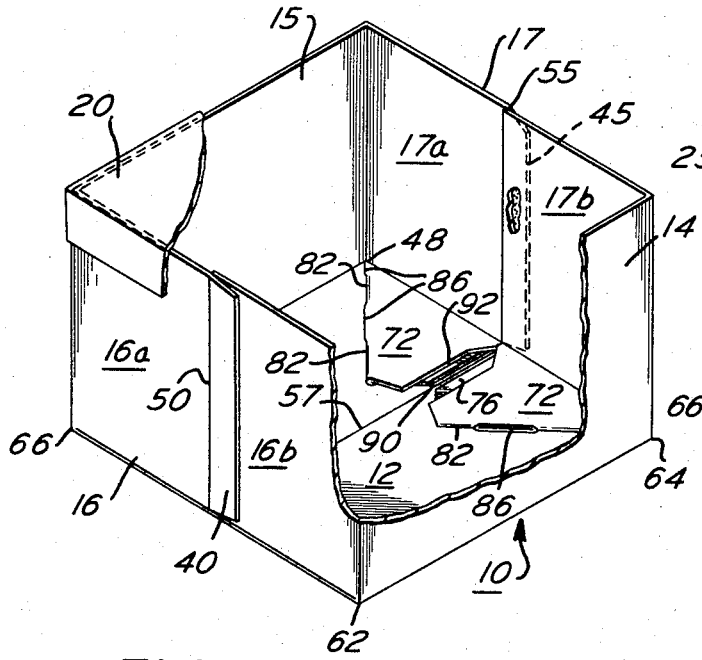

FIG. 2

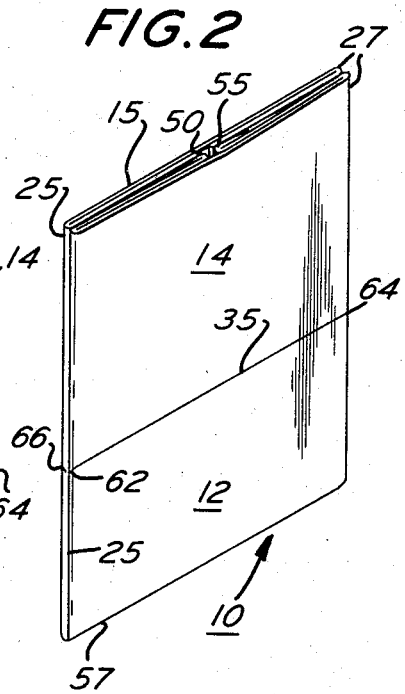

FIG. 3

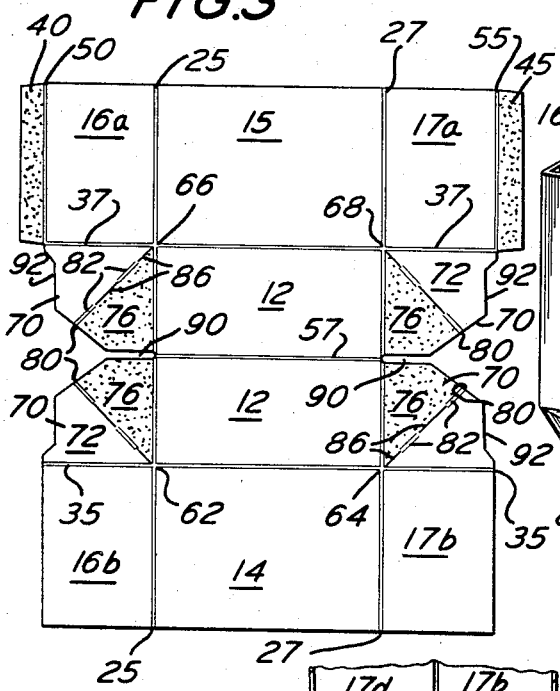

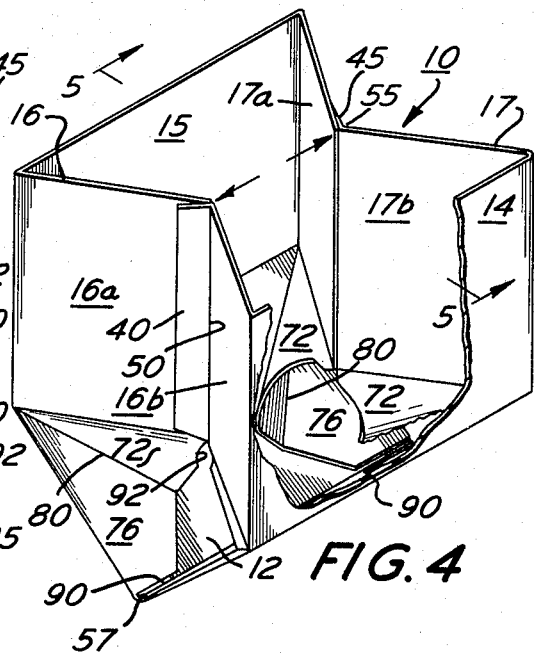

FIG. 4

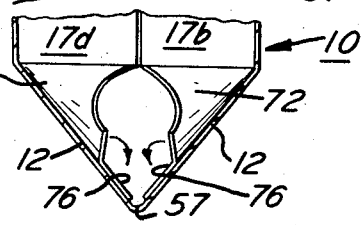

FIG. 5

INVENTOR
CHARLES A. STOPPER
BY Jacob Trachtman
ATTORNEY