FIG. 1a

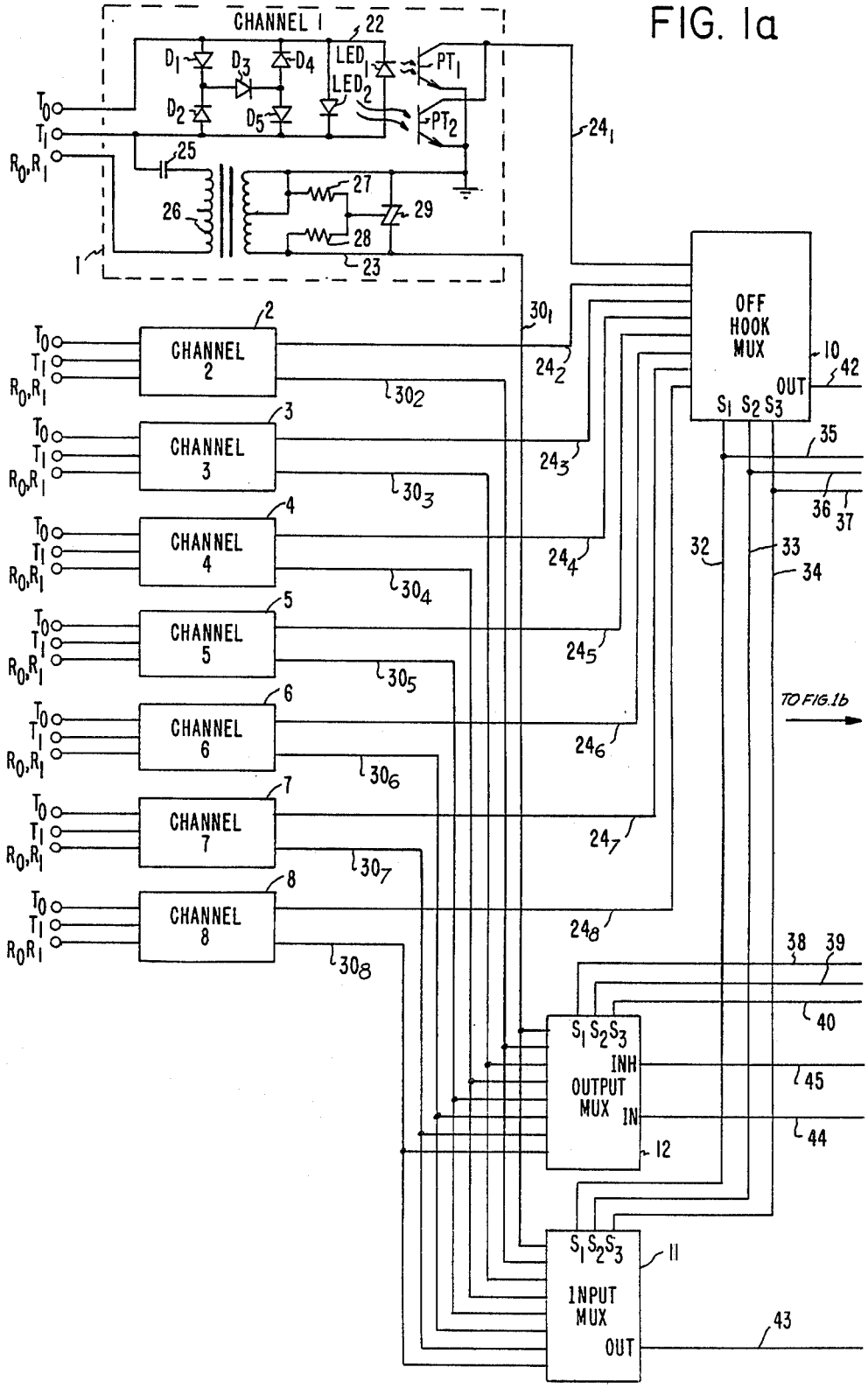
CHANNEL 1
22
D1
D3
D4
LED1
LED2
PT1
PT2
D2
D5
T0
T1
R0,R1
25
26
27
28
29
23
1
24₁
OFF HOOK MUX
10
42
OUT
S1 S2 S3
CHANNEL 2
CHANNEL 3
CHANNEL 4
CHANNEL 5
CHANNEL 6
CHANNEL 7
CHANNEL 8
2
3
4
5
6
7
8
30₁
30₂
30₃
30₄
30₅
30₆
30₇
30₈
24₂
24₃
24₄
24₅
24₆
24₇
24₈
35
36
37
32
33
34
TO FIG. 1b
38
39
40
OUTPUT MUX
INH
IN
45
44
12
INPUT MUX
11
43