US008360629B2

(12) **United States Patent**
Globerman et al.

(10) **Patent No.: US 8,360,629 B2**
(45) **Date of Patent: Jan. 29, 2013**

(54) **MIXING APPARATUS HAVING CENTRAL AND PLANETARY MIXING ELEMENTS**

(75) Inventors: **Oren Globerman**, Kfar-Shmaryahu (IL); **Mordechay Beyar**, Caesarea (IL)

(73) Assignee: **DePuy Spine, Inc.**, Raynham, MA (US)

(*) Notice: Subject to any disclaimer, the term of this patent is extended or adjusted under 35 U.S.C. 154(b) by 908 days.

(21) Appl. No.: **11/428,908**

(22) Filed: **Jul. 6, 2006**

(65) **Prior Publication Data**

US 2008/0212405 A1 Sep. 4, 2008

Related U.S. Application Data

(63) Continuation-in-part of application No. 11/360,251, filed on Feb. 22, 2006.

(60) Provisional application No. 60/738,556, filed on Nov. 22, 2005, provisional application No. 60/762,789, filed on Jan. 26, 2006, provisional application No. 60/765,484, filed on Feb. 2, 2006.

(51) **Int. Cl.**
B01F 7/30 (2006.01)

(52) **U.S. Cl.** **366/288**; 366/245; 366/309

(58) **Field of Classification Search** 366/64–67, 366/96–98, 139, 288, 241–252, 272, 309–313
See application file for complete search history.

(56) **References Cited**

U.S. PATENT DOCUMENTS

229,932	A	*	7/1880	Witsil	209/465
370,335	A	*	9/1887	Hunter	366/288
817,973	A		4/1906	Hausman	
833,044	A		10/1906	Goodhugh	
843,587	A		2/1907	DePew	
1,175,530	A		3/1916	Kirchoff	
1,612,281	A	*	12/1926	Goetz	366/244
1,612,996	A		1/1927	Waagbo	
1,733,516	A	*	10/1929	Jamieson et al.	366/300
1,894,274	A		1/1933	Jacques	
2,067,458	A		1/1937	Nichols	
2,123,712	A		7/1938	Clark	
2,283,915	A		5/1942	Cole	
2,394,488	A		2/1946	Rotter et al.	
2,425,867	A		8/1947	Davis	
2,435,647	A		2/1948	Engseth	
2,497,762	A		2/1950	Davis	
2,521,569	A		9/1950	Davis	
2,567,960	A		9/1951	Meyers et al.	
2,745,575	A		5/1956	Spencer	
2,773,500	A		12/1956	Young	
2,808,239	A	*	10/1957	Reiffen	366/94
2,874,877	A		2/1959	Spencer	
2,918,841	A		12/1959	Poupitch	

(Continued)

FOREIGN PATENT DOCUMENTS

AU	724544	11/1996
AU	9865136	9/1998

(Continued)

OTHER PUBLICATIONS

International Search Report, from corresponding PCT/IL07/00833, dated Apr. 4, 2008.

(Continued)

Primary Examiner — Charles E Cooley
(74) *Attorney, Agent, or Firm* — Nutter McClennen & Fish LLP

(57) **ABSTRACT**

A mixing apparatus comprising: a) a mixing well characterized by an internal volume not exceeding 100 ml.; b) a drive mechanism including a stationary circumferential gear on an inner surface of the mixing well; and c) a planetary mixing element driven by a mixing element gear which engages the stationary circumferential gear.
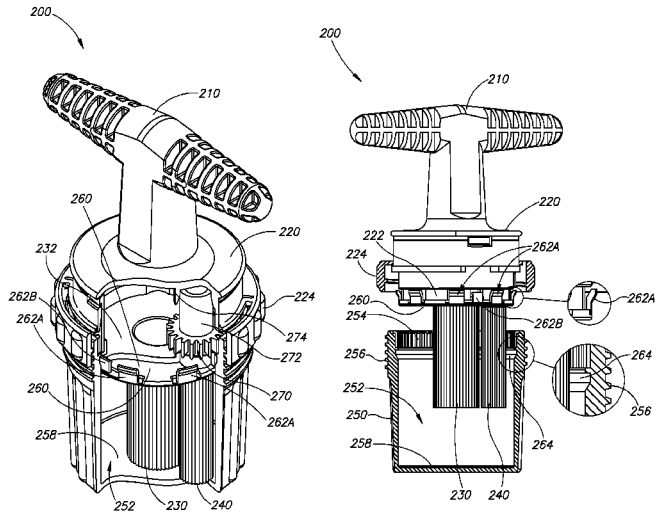
22 Claims, 10 Drawing Sheets