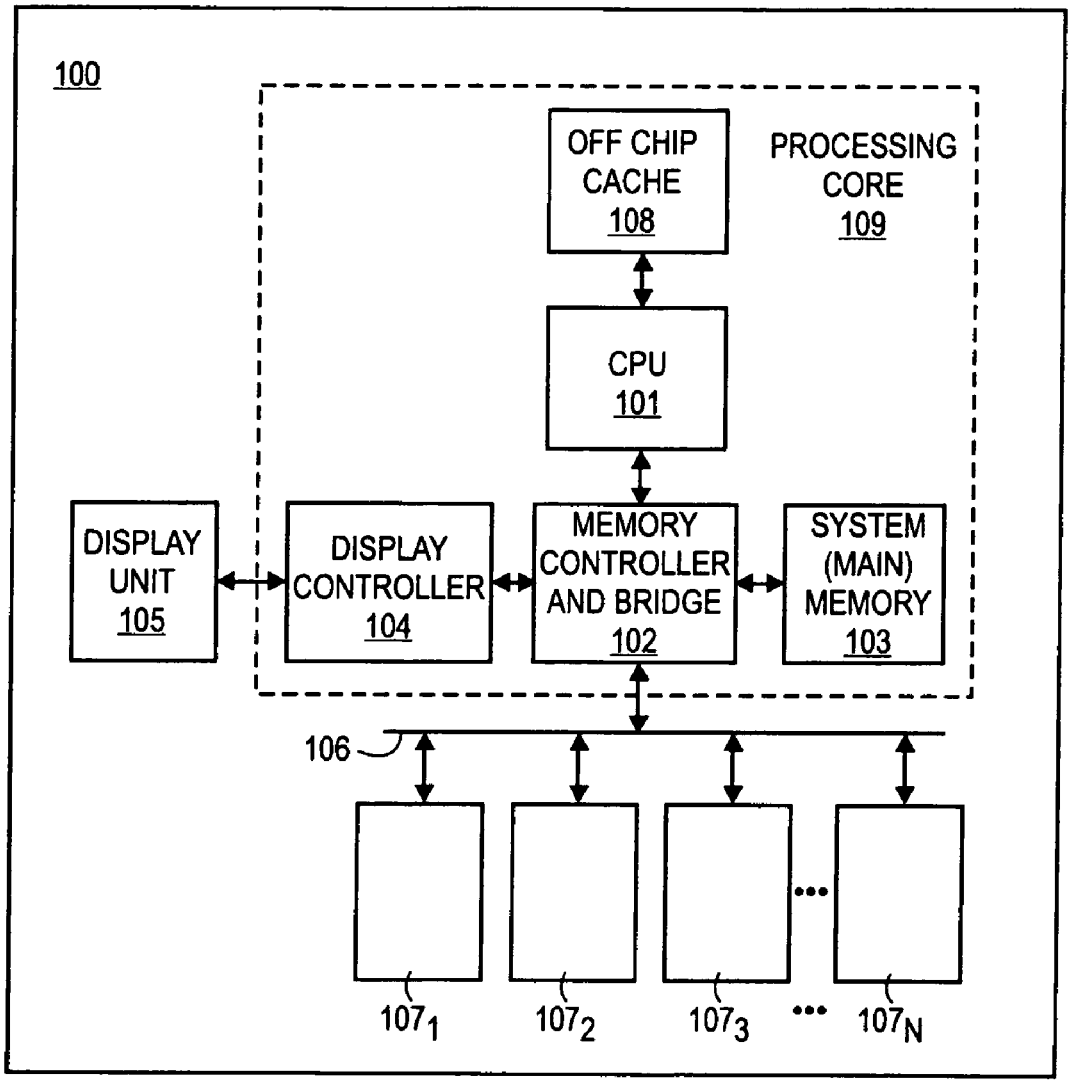
100
OFF CHIP CACHE 108
PROCESSING CORE 109
CPU 101
DISPLAY UNIT 105
DISPLAY CONTROLLER 104
MEMORY CONTROLLER AND BRIDGE 102
SYSTEM (MAIN) MEMORY 103
106
107₁
107₂
107₃
107N

FIG. 1