US008651329B2

(12) **United States Patent**
Reynolds et al.

(10) **Patent No.: US 8,651,329 B2**
(45) **Date of Patent: Feb. 18, 2014**

(54) **METHODS FOR RESETTING STALLED PUMPS IN ELECTRONICALLY CONTROLLED DISPENSING SYSTEMS**

(75) Inventors: **Aaron R. Reynolds**, North Canton, OH (US); **Jackson W. Wegelin**, Stow, OH (US); **Robert L. Quinlan, Jr.**, Stow, OH (US); **Robert S. Hackney**, Toronto (CA); **Cuong Truong**, Scarborough (CA)

(73) Assignee: **Gojo Industries, Inc.**, Akron, OH (US)

(*) Notice: Subject to any disclaimer, the term of this patent is extended or adjusted under 35 U.S.C. 154(b) by 53 days.

(21) Appl. No.: **13/193,936**

(22) Filed: **Jul. 29, 2011**

(65) **Prior Publication Data**

US 2011/0278322 A1 Nov. 17, 2011

(51) **Int. Cl.**

B67D 7/14	(2010.01)
B67D 7/06	(2010.01)
B67D 3/00	(2006.01)

(52) **U.S. Cl.**

USPC **222/52**; 222/23; 222/181.3; 222/504; 222/325

(58) **Field of Classification Search**

USPC 222/41, 1, 23, 52, 63, 181.1, 181.2, 222/181.3, 321.1, 321.7, 333, 504, 62, 5, 222/402.1, 65, 325, 53

See application file for complete search history.

(56) **References Cited**

U.S. PATENT DOCUMENTS

4,722,372	A *	2/1988	Hoffman et al.	141/98
5,226,566	A *	7/1993	Brandenburg	222/180
5,605,251	A *	2/1997	Retti	222/1
5,829,636	A	11/1998	Vuong et al.	222/63
5,836,482	A	11/1998	Ophardt et al.	222/325
5,908,140	A	6/1999	Muderlak et al.	222/1
6,394,310	B1	5/2002	Muderlak et al.	222/1
6,431,400	B1 *	8/2002	O'Maley et al.	222/41
6,467,651	B1	10/2002	Muderlak et al.	222/52
6,651,851	B2	11/2003	Muderlak et al.	222/333
6,929,150	B2	8/2005	Muderlak et al.	222/1
7,497,297	B2	3/2009	Watson et al.	180/248
7,611,030	B2 *	11/2009	Reynolds et al.	222/1
7,621,426	B2 *	11/2009	Reynolds et al.	222/325
7,909,209	B2 *	3/2011	Reynolds et al.	222/41
2002/0166871	A1	11/2002	Muderlak et al.	222/23
2005/0171634	A1	8/2005	York et al.	700/231

(Continued)

FOREIGN PATENT DOCUMENTS

EP	1 671 568 A2	12/2005	A14K 5/12

OTHER PUBLICATIONS

International Search Report in corresponding application No. PCT/US2012/046835 mailed Nov. 7, 2012.

(Continued)

Primary Examiner — Kevin P Shaver
Assistant Examiner — Stephanie E Williams
(74) *Attorney, Agent, or Firm* — Renner Kenner Greive Bobak Taylor & Weber

(57) **ABSTRACT**

A system and related method is disclosed for resetting a stalled pump in a fluid dispensing system. In one embodiment, the presence of a user's hand is detected to start a pump actuator associated with a refill container. A controller associated with a motor actuates the pump actuator by rotating a motor shaft in a first direction. The current sensor is monitored and when the current sensor detects a predetermined level of current the motor shaft is reversed to a starting position.
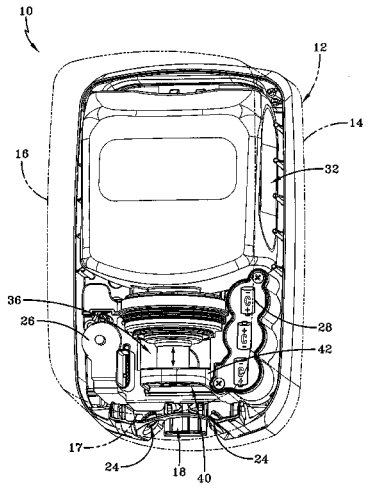
5 Claims, 6 Drawing Sheets