US008744529B2

(12) **United States Patent**
**Freund et al.**

(10) **Patent No.: US 8,744,529 B2**
(45) **Date of Patent: Jun. 3, 2014**

(54) **ENHANCED MOBILE DEVICE HAVING MULTIPLE HOUSING CONFIGURATIONS**

(75) Inventors: **Joseph M. Freund**, Fogelsville, PA (US); **Roger A. Fratti**, Mohnton, PA (US); **John M. DeLucca**, Montgomery, PA (US)

(73) Assignee: **LSI Corporation**, San Jose, CA (US)

( * ) Notice: Subject to any disclaimer, the term of this patent is extended or adjusted under 35 U.S.C. 154(b) by 30 days.

(21) Appl. No.: **13/595,277**

(22) Filed: **Aug. 27, 2012**

(65) **Prior Publication Data**

US 2014/0057682 A1 Feb. 27, 2014

(51) **Int. Cl.**
***H04M 1/02*** (2006.01)

(52) **U.S. Cl.**
USPC ..... **455/566**; 455/575.3; 455/575.4; 455/575.1

(58) **Field of Classification Search**
USPC ..... 455/566, 575.3, 575.4, 575.1
See application file for complete search history.

(56) **References Cited**

U.S. PATENT DOCUMENTS

| | | | | |
|---|---|---|---|---|
| 7,158,634 | B2 * | 1/2007 | Eromaki | 379/433.13 |
| 7,333,062 | B2 | 2/2008 | Leizerovich et al. | |
| 7,483,723 | B2 | 1/2009 | Söderlund | |
| 7,599,181 | B2 * | 10/2009 | Chuang et al. | 361/679.55 |
| 7,652,877 | B2 * | 1/2010 | Nishizawa | 361/679.27 |
| 2007/0057852 | A1 * | 3/2007 | Leizerovich et al. | 343/702 |
| 2007/0184812 | A1 * | 8/2007 | Bitton | 455/344 |
| 2007/0287512 | A1 | 12/2007 | Kilpi et al. | |
| 2008/0218955 | A1 * | 9/2008 | Nishizawa | 361/681 |
| 2008/0311963 | A1 * | 12/2008 | Strawn | 455/575.1 |
| 2010/0151925 | A1 | 6/2010 | Vedurmudi et al. | |
| 2010/0227656 | A1 * | 9/2010 | Kristensson et al. | 455/575.4 |
| 2010/0321871 | A1 * | 12/2010 | Diebel et al. | 361/679.01 |
| 2011/0299235 | A1 | 12/2011 | Liu et al. | |
| 2012/0149448 | A1 * | 6/2012 | Fargrenius et al. | 455/575.4 |
| 2012/0257368 | A1 * | 10/2012 | Bohn et al. | 361/809 |
| 2012/0307423 | A1 * | 12/2012 | Bohn et al. | 361/679.01 |

OTHER PUBLICATIONS

"Loop Antennas," Reflections and Standing Wave Ratio, www.ycars.org/EFRA/Module C/AntLoop.htm, Jul. 2012, 4 pages.
"RB8310 014/73 TECH," Official Ray-Ban Store, Ray-Ban RD8310 Tech Sunglasses, www.ray-ban.com/usa/rb8310, 1 page.
"RAY-BAN," Ray-Ban Official Web Site/Tech—USA, www.ray-ban.com/usa/science/tech, 2 pages.

* cited by examiner

*Primary Examiner* — Jinsong Hu
*Assistant Examiner* — Jean Chang
(74) *Attorney, Agent, or Firm* — Ryan, Mason & Lewis, LLP

(57) **ABSTRACT**

An apparatus comprises a first housing having a top surface and a bottom surface, a second housing having a top surface and a bottom surface, and one or more supports coupling the first housing to the second housing such that the first and second housings are electrically connected and the bottom surface of the first housing overlays the top surface of the second housing. The one or more supports are configurable in at least a first configuration wherein the bottom surface of the first housing and the top surface of the second housing are substantially contiguous with one another and a second configuration wherein the bottom surface of the first housing and the top surface of the second housing are separated by a space.
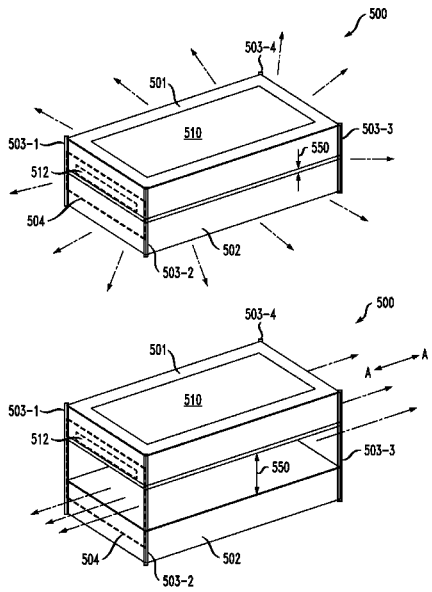
**23 Claims, 11 Drawing Sheets**