US009636529B1

(12) **United States Patent**
Murray

(10) **Patent No.: US 9,636,529 B1**
(45) **Date of Patent: May 2, 2017**

(54) **STOVETOP FIRE SUPPRESSOR MOUNTING DEVICE AND METHOD**

(71) Applicant: **Donald W Murray**, Arlington, TX (US)

(72) Inventor: **Donald W Murray**, Arlington, TX (US)

(73) Assignee: **WilliamsRDM, Inc.**, Fort Worth, TX (US)

(*) Notice: Subject to any disclaimer, the term of this patent is extended or adjusted under 35 U.S.C. 154(b) by 800 days.

(21) Appl. No.: **13/896,691**

(22) Filed: **May 17, 2013**

Related U.S. Application Data

(60) Provisional application No. 61/769,737, filed on Feb. 26, 2013.

(51) **Int. Cl.**
F16B 43/00 (2006.01)
A62C 3/00 (2006.01)

(52) **U.S. Cl.**
CPC ***A62C 3/006*** (2013.01)

(58) **Field of Classification Search**
CPC A62C 3/006
USPC 411/371.2
See application file for complete search history.

(56) **References Cited**

U.S. PATENT DOCUMENTS

2,219,178 A * 10/1940 Eagle A62C 13/003 222/399
2,387,125 A * 10/1945 Derby E05B 47/00 74/2
3,040,815 A 6/1962 Pambello
3,209,837 A 10/1965 Freedman
3,773,111 A 11/1973 Dunn
3,833,063 A 9/1974 Williams
3,874,458 A 4/1975 Williams
3,884,306 A 5/1975 Williams
3,884,307 A 5/1975 Williams
3,897,828 A 8/1975 Glover
3,918,526 A 11/1975 Hattori
4,011,911 A 3/1977 Gow
4,113,020 A 9/1978 Panetta
4,964,469 A 10/1990 Smith
5,351,760 A 10/1994 Tabor
5,518,075 A * 5/1996 Williams A62C 35/08 169/28
5,628,367 A 5/1997 Truax et al.
5,868,205 A 2/1999 Cunningham et al.
5,871,057 A 2/1999 Stehling et al.
(Continued)

Primary Examiner — Gary Estremsky
(74) *Attorney, Agent, or Firm* — Morani Patent Law, PC

(57) **ABSTRACT**

A mounting device and method of mounting an automatic stovetop fire suppressor are provided herein. Stovetop fires are a well-known residential and commercial hazard. Common parts are utilized across the stovetop fire suppressors employed in different stovetop configurations, reducing inventory count. The mount design can be automated for greater efficiency of time and labor and may provide increased production or throughput. A magnet is attached at the factory for the vent hood product, eliminating the need for such assembly by an end user. This attachment also alleviates loss or misplacement of the magnet during unpacking or installation. A threaded insert is staked to the fire suppressor can and affords reliable retention of the magnet to the fires suppressor can. The present designs enables formation of a consistent vent area in the fire suppressor can.
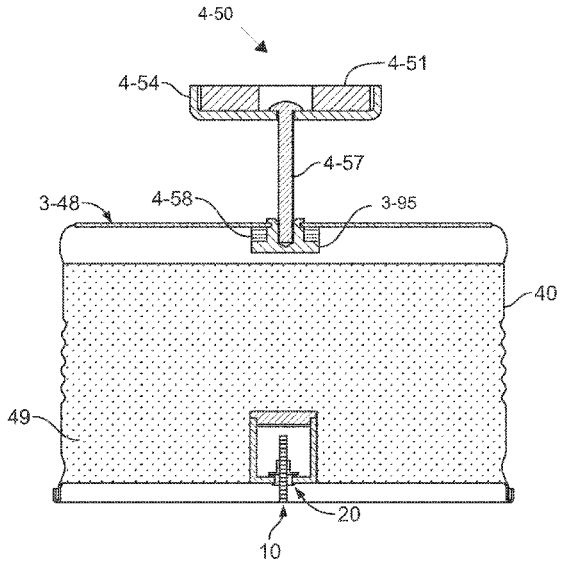
13 Claims, 8 Drawing Sheets