US005231329A

United States Patent [19]

Nishikitani et al.

[11] Patent Number: 5,231,329

[45] Date of Patent: Jul. 27, 1993

[54] ORGANIC THIN FILM ELECTROLUMINESCENT DEVICE

[75] Inventors: **Yoshinori Nishikitani**, Yokohama; **Naoki Kataoka**, Kawasaki; **Nobuyuki Kuroda**; **Kazuo Matsuura**, both of Yokohama, all of Japan

[73] Assignee: **Nippon Oil Co., Ltd.**, Tokyo, Japan

[21] Appl. No.: **728,646**

[22] Filed: **Jul. 11, 1991**

[30] **Foreign Application Priority Data**

Jul. 16, 1990 [JP] Japan 2-185400

[51] **Int. Cl.**[5] **H01J 1/62**

[52] **U.S. Cl.** **313/503**; 313/504; 313/506; 313/463; 428/690; 428/691; 428/917

[58] **Field of Search** 313/501, 503, 504, 506, 313/463; 428/690, 691, 917, 918, 930, 931

[56] **References Cited**

U.S. PATENT DOCUMENTS

4,539,507 9/1985 Vanslyke et al. 313/504

4,769,292 9/1988 Tang et al. ..... 313/504 X

OTHER PUBLICATIONS

Adachi et al., *Jap. J. of Appl. Phys.*, 27:L269–L271, Feb. 1988.

Tang et al., *Appl. Phys. Lett.*, 51:913–915, Jul. 1987.

Primary Examiner—Donald J. Yusko

Assistant Examiner—Ashok Patel

Attorney, Agent, or Firm—Darby & Darby

[57] **ABSTRACT**

An organic thin film electroluminescent device is composed of an electron transport layer, a hole transport layer and a transparent electrode. The electron transport layer is constituted of an electron conducting polymer represented by the formula (I)

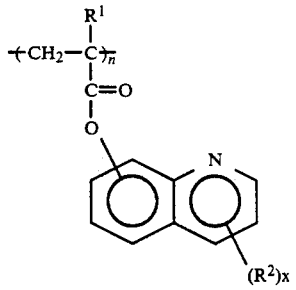

(I)

wherein R^1 is a hydrogen atom or an alkyl group having 1 to 4 carbon atoms, R^2 is a hydrogen atom, an alkyl or alkoxy group having 1 to 4 carbon atoms, an aryl group, an aryloxy group, a thioether group, an amino group, a halogen atom, an aldehyde group, a cyano group, a nitro group or a hydroxyl group, x is an integer of 1 to 6, on the condition that, if x is an integer of 2 to 6, R^2 may be the same or different, and n is an integer not less than 2.
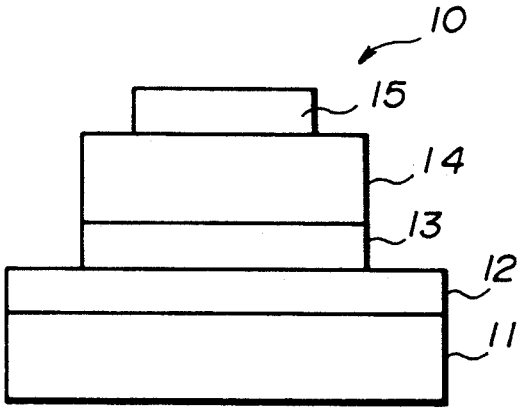
15 Claims, 2 Drawing Sheets