US00D812929S

(12) United States Design Patent

Garland

(10) Patent No.: US D812,929 S
(45) Date of Patent: ** Mar. 20, 2018

(54) **TOWEL BAR**

(71) Applicant: **DELTA FAUCET COMPANY**, Indianapolis, IN (US)

(72) Inventor: **Celine Kwok Garland**, Zionsville, IN (US)

(73) Assignee: **DELTA FAUCET COMPANY**, Indianapolis, IN (US)

(**) Term: **15 Years**

(21) Appl. No.: **29/595,221**

(22) Filed: **Feb. 27, 2017**

(51) **LOC (11) Cl.** **06-04**

(52) **U.S. Cl.**
USPC **D6/549**

(58) **Field of Classification Search**
USPC D6/546–550, 512–525; 211/13.1, 16, 211/85.5, 86.01, 87.01, 88.04, 100, 105.1, 211/105.2, 106, 113, 123, 181.1, 211/182–183; 248/49, 175, 176.1, 200, 248/201, 205.1, 251, 302, 309.1, 315; D8/300, 315–321, 354, 363, 373, 380; 108/28–29; 242/570, 590, 595–598; D25/45
CPC A47K 10/10; A47K 10/04; A47K 2201/00; A47K 2201/02; Y10S 16/40; Y10S 16/41; Y10T 16/458; Y10T 16/462; Y10T 16/513; B60N 2/0715; A61L 15/26
See application file for complete search history.

(56) **References Cited**

U.S. PATENT DOCUMENTS

D193,468 S * 8/1962 Thompson D8/319
D207,835 S * 6/1967 Dexter D6/533
4,420,178 A * 12/1983 Taylor A45F 5/1026 229/117.19
D290,935 S * 7/1987 Williams D8/315
D314,108 S * 1/1991 Chap D6/523
D329,369 S * 9/1992 Martin D8/302
D360,095 S * 7/1995 Wang D6/548
D419,853 S * 2/2000 Workman D8/317
D506,377 S * 6/2005 Marzolf D8/300
D573,825 S * 7/2008 Rubin D6/546
D629,275 S * 12/2010 Schmidt D8/300
D764,833 S * 8/2016 Citterio D6/549
D785,367 S * 5/2017 Eads D6/549

* cited by examiner

Primary Examiner — David G Muller
Assistant Examiner — Nathan M Johnston
(74) *Attorney, Agent, or Firm* — Edgar A. Zarins; Nirav D. Parikh

(57) **CLAIM**

The ornamental design for a towel bar, as shown and described.

DESCRIPTION

FIG. **1** is a perspective view of a towel bar showing my new design;
FIG. **2** is a top plan view thereof, the bottom plan view being a mirror image;
FIG. **3** is a front elevation view thereof;
FIG. **4** is a rear elevation view thereof; and,
FIG. **5** is a right side elevation view thereof, the left side elevation view being a mirror image.
The broken lines show portions of the design that form no part of the claimed design.
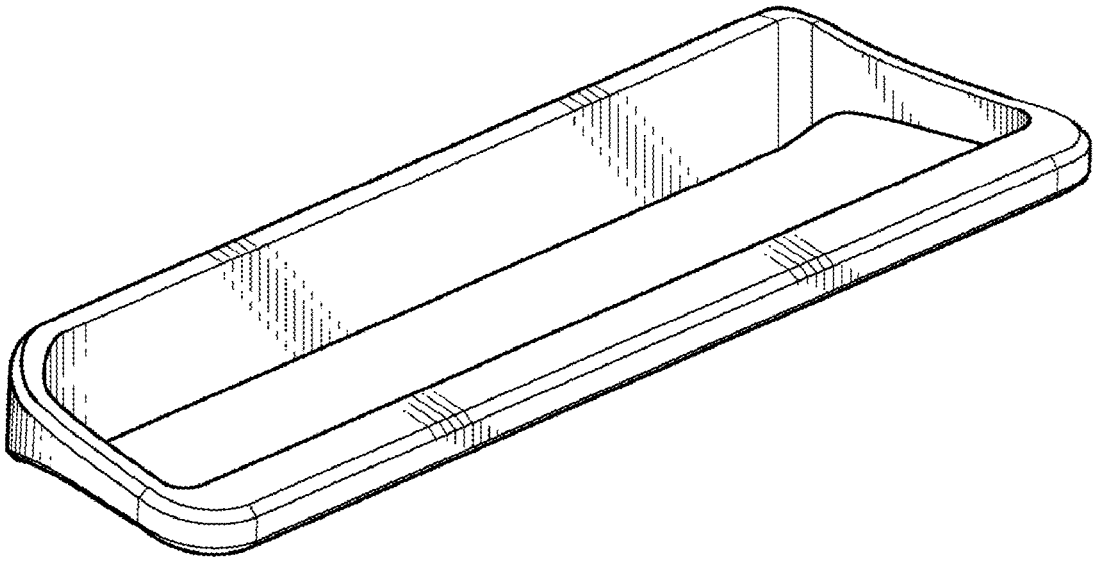
1 Claim, 1 Drawing Sheet