US009410429B2

(12) **United States Patent**
Watson et al.

(10) **Patent No.: US 9,410,429 B2**
(45) **Date of Patent: Aug. 9, 2016**

(54) **AIR COOLING SHAFT AT BEARING INTERFACE**

(71) Applicant: **Pratt & Whitney Canada Corp.**, Longueuil (CA)

(72) Inventors: **John Watson**, Saint-Lambert (CA); **Guy Bouchard**, Mont St-Hilaire (CA); **Daniel Blais**, St-Jean sur Richelieu (CA)

(73) Assignee: **PRATT & WHITNEY CANADA CORP.**, Longueuil (CA)

(*) Notice: Subject to any disclaimer, the term of this patent is extended or adjusted under 35 U.S.C. 154(b) by 634 days.

(21) Appl. No.: **13/690,083**

(22) Filed: **Nov. 30, 2012**

(65) **Prior Publication Data**

US 2014/0150449 A1 Jun. 5, 2014

(51) **Int. Cl.**
F01D 25/12 (2006.01)
F01D 5/02 (2006.01)
F01D 25/16 (2006.01)

(52) **U.S. Cl.**
CPC ***F01D 5/026*** (2013.01); ***F01D 25/125*** (2013.01); ***F01D 25/16*** (2013.01)

(58) **Field of Classification Search**
CPC F01D 5/026; F01D 5/08; F01D 25/125
See application file for complete search history.

(56) **References Cited**

U.S. PATENT DOCUMENTS

2,860,851 A * 11/1958 Halford et al. ..... 416/97 R
4,086,759 A 5/1978 Karstensen et al.
4,793,772 A 12/1988 Zaehring et al.
5,271,711 A 12/1993 McGreehan et al.
5,472,313 A 12/1995 Quinones et al.
5,564,896 A 10/1996 Beeck et al.
5,593,274 A 1/1997 Carreno et al.
5,619,850 A 4/1997 Palmer et al.
6,155,040 A 12/2000 Sasaki
6,293,089 B1 9/2001 Sasaki
6,334,755 B1 1/2002 Coudray et al.
6,450,758 B1 9/2002 Schmidt
6,513,335 B2 2/2003 Fukutani
6,582,187 B1 6/2003 Skockley et al.
6,655,153 B2 12/2003 Akiyama et al.
6,860,110 B2 3/2005 Akiyama et al.
7,624,580 B2 12/2009 Fukutani

FOREIGN PATENT DOCUMENTS

GB 595348 A * 12/1947 ..... F01D 25/125

* cited by examiner

Primary Examiner — Richard Edgar
(74) *Attorney, Agent, or Firm* — Norton Rose Fulbright Canada LLP

(57) **ABSTRACT**

A gas turbine engine including a compressor rotor and a turbine rotor connected by a compressor shaft portion connected to the compressor rotor and a turbine shaft portion connected to the turbine rotor. The compressor shaft portion and the turbine shaft portion are connected axially together by a shaft coupling, between the compressor rotor and the turbine rotor, and at least a bearing rotatably coupled to the compressor shaft portion adjacent the shaft coupling. The compressor shaft and/or the turbine shaft are provided with openings permitting cooling air to enter air passages in the area of the shaft coupling and surrounding the end of the turbine shaft portion, in order to dissipate heat originating at the turbine rotor and thus reducing the thermal stresses at the bearing.
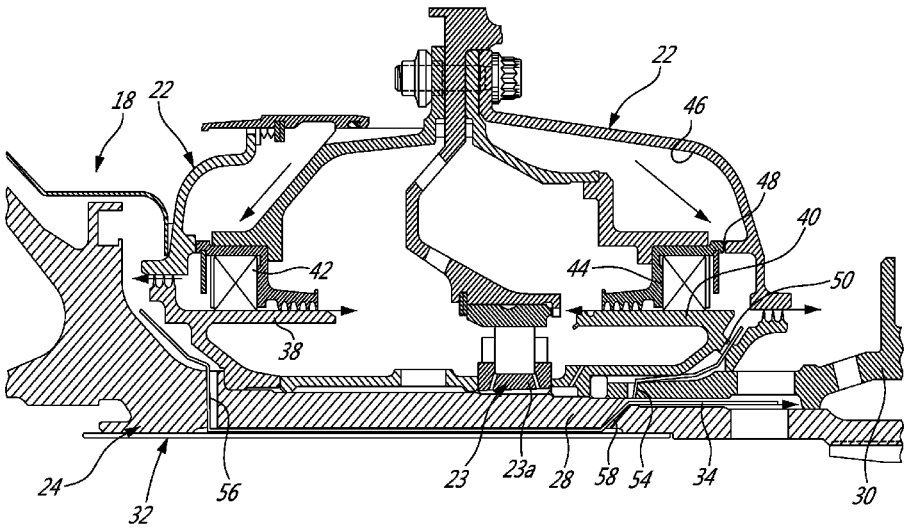
15 Claims, 3 Drawing Sheets