US009409129B2

(12) **United States Patent**
Duke et al.

(10) **Patent No.: US 9,409,129 B2**
(45) **Date of Patent: Aug. 9, 2016**

(54) **HEAT EXCHANGE SYSTEM**

(75) Inventors: **Mikel Colin Duke**, Newport (AU); **Angela Hausmann**, Voerde (DE)

(73) Assignee: **VICTORIA UNIVERSITY**, Melbourne, Victoria (AU)

(*) Notice: Subject to any disclaimer, the term of this patent is extended or adjusted under 35 U.S.C. 154(b) by 430 days.

(21) Appl. No.: **14/002,452**

(22) PCT Filed: **Mar. 2, 2012**

(86) PCT No.: **PCT/AU2012/000215**
§ 371 (c)(1),
(2), (4) Date: **Nov. 19, 2013**

(87) PCT Pub. No.: **WO2012/116409**
PCT Pub. Date: **Sep. 7, 2012**

(65) **Prior Publication Data**

US 2015/0090647 A1 Apr. 2, 2015

(30) **Foreign Application Priority Data**

Mar. 3, 2011 (AU) 2011900759

(51) **Int. Cl.**
B01D 3/00 (2006.01)
B01D 61/36 (2006.01)
F28D 21/00 (2006.01)
(Continued)

(52) **U.S. Cl.**
CPC ***B01D 61/364*** (2013.01); ***B01D 61/368*** (2013.01); ***C02F 1/02*** (2013.01); ***C02F 1/447*** (2013.01); ***F28D 21/0015*** (2013.01);
(Continued)

(58) **Field of Classification Search**
USPC 202/233, 185.2, 239, 270; 210/151, 210/175, 180, 321.72, 321.77
See application file for complete search history.

(56) **References Cited**

U.S. PATENT DOCUMENTS

3,406,096 A 10/1968 Rodgers
4,476,024 A 10/1984 Cheng
(Continued)

FOREIGN PATENT DOCUMENTS

JP 60-187305 A 9/1985
JP 60-197205 A 10/1985
(Continued)

OTHER PUBLICATIONS

Kullab, A. et al. (2011). "Membrane Distillation and Applications for Water Purification in Thermal Cogeneration Plants," *Separation and Purification Technology* 76:231-237.
(Continued)

Primary Examiner — Nina Bhat
(74) *Attorney, Agent, or Firm* — Morrison & Foerster LLP

(57) **ABSTRACT**

A heat exchanger including a hot process stream fluidly connected to an industrial process, a cold process stream fluidly connected to an industrial process, and a membrane distillation system. The membrane distillation system includes a vaporizing stream comprising a mixture of components, a condensing stream, and a membrane located between the vaporizing stream and the condensing stream. The vaporizing stream and condensing stream are in fluid communication through the membrane. The membrane distillation system also includes a first heat transfer area between the hot process stream and the vaporizing stream. Additionally, the membrane distillation system includes a second heat transfer area between the condensing stream and the cold process stream.
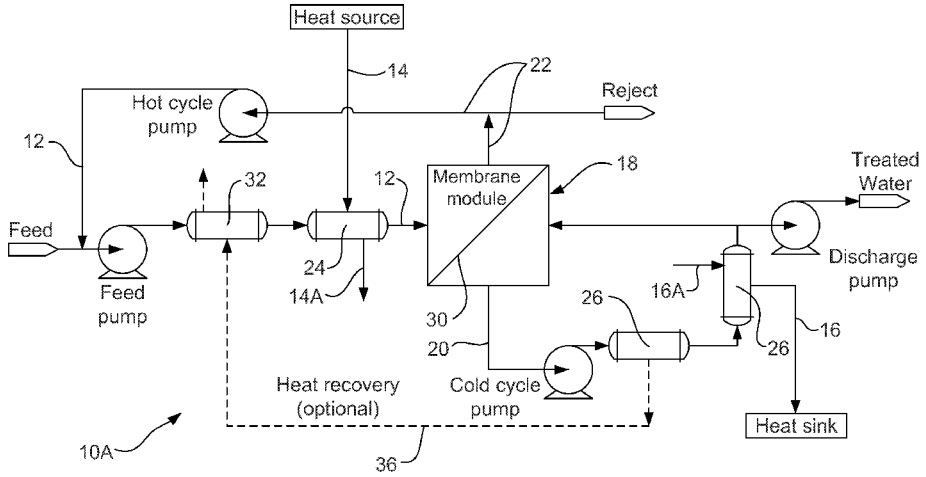
16 Claims, 4 Drawing Sheets