Aug. 27, 1946. A. K. WHITE ET AL 2,406,729

HANDY TWO PART FOLDING SCREEN

Filed Feb. 28, 1944

Fig. 1.

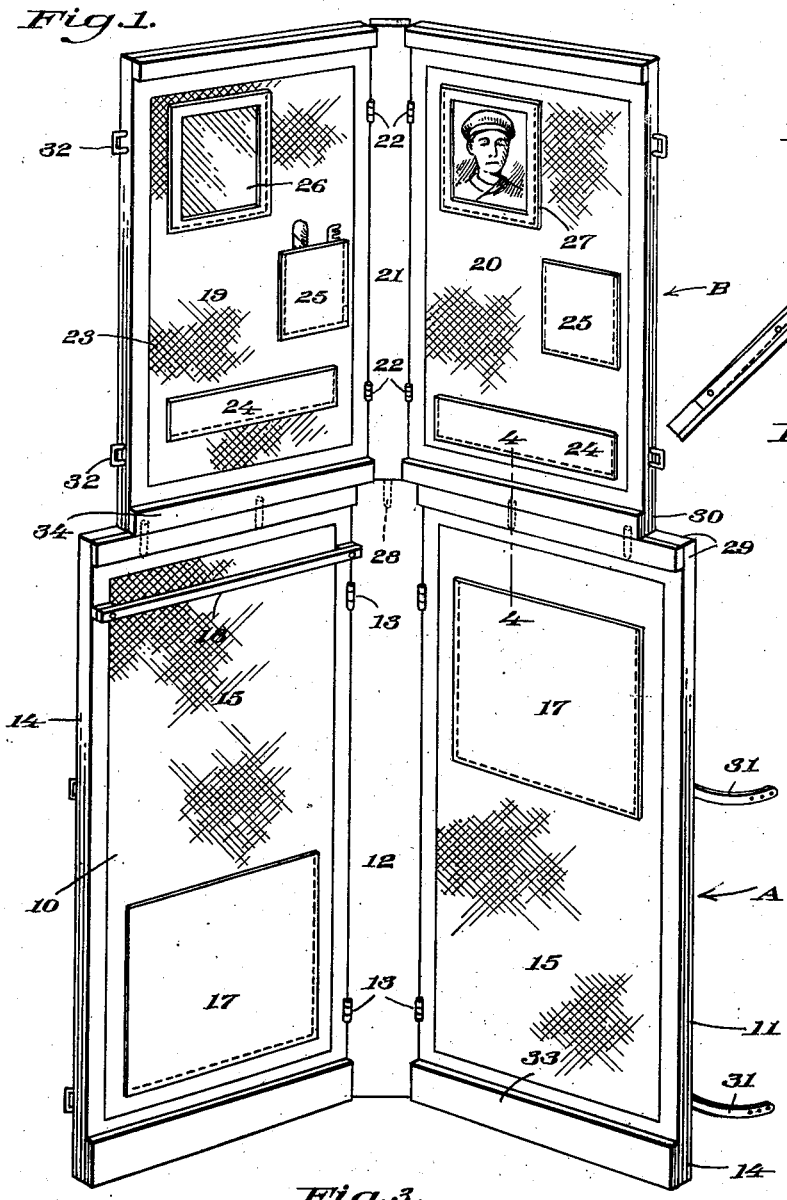

Fig. 2.

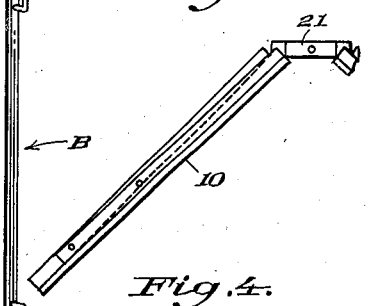

Fig. 4.

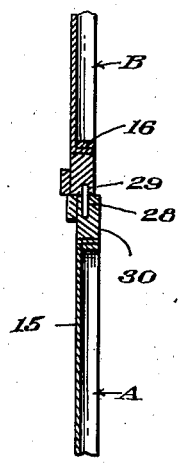

Fig. 3.

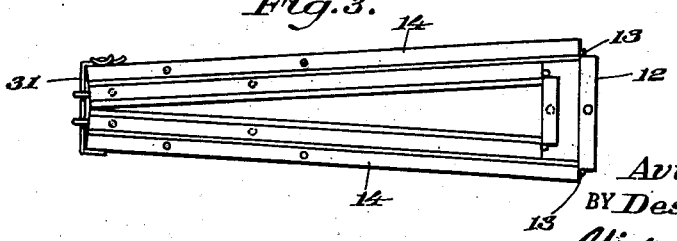

INVENTORS
Avis K. White:
BY Deslie F. White:
Victor J. Evans & Co.
ATTORNEYS