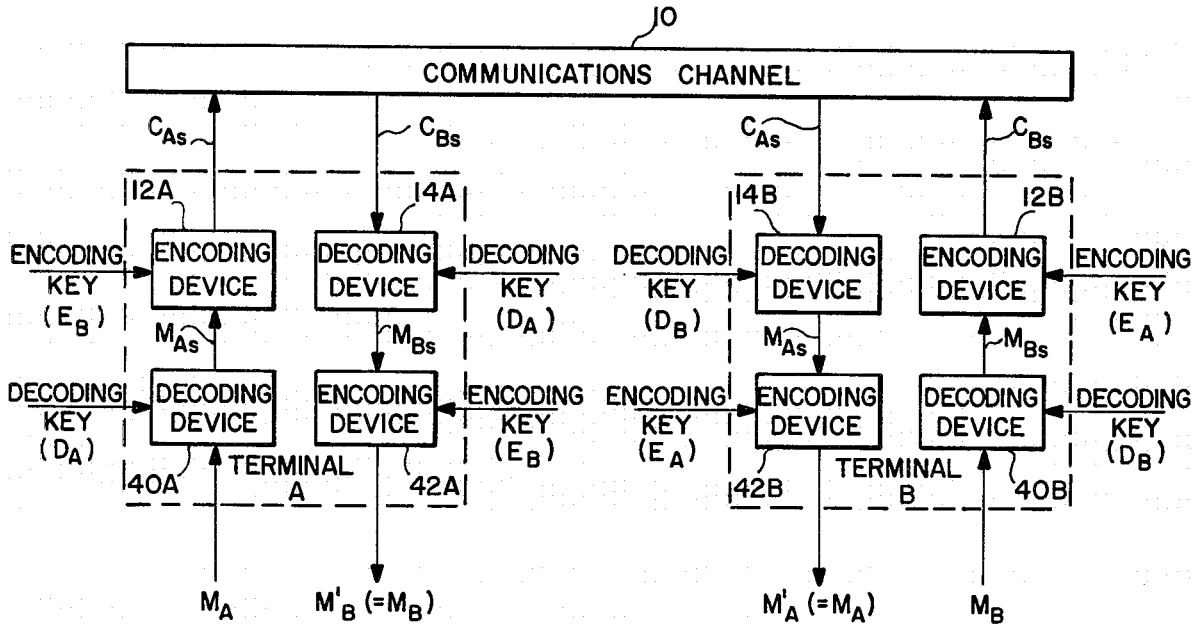
10
COMMUNICATIONS CHANNEL
C_{As}
C_{Bs}
C_{As}
C_{Bs}
12A
14A
14B
12B
ENCODING KEY (E_B)
ENCODING DEVICE
DECODING DEVICE
DECODING KEY (D_A)
DECODING KEY (D_B)
DECODING DEVICE
ENCODING DEVICE
ENCODING KEY (E_A)
M_{As}
M_{Bs}
M_{As}
M_{Bs}
DECODING KEY (D_A)
DECODING DEVICE
ENCODING DEVICE
ENCODING KEY (E_B)
ENCODING KEY (E_A)
ENCODING DEVICE
DECODING DEVICE
DECODING KEY (D_B)
40A
TERMINAL A
42A
42B
TERMINAL B
40B
M_A
M'_B (=M_B)
M'_A (=M_A)
M_B

FIG. 6

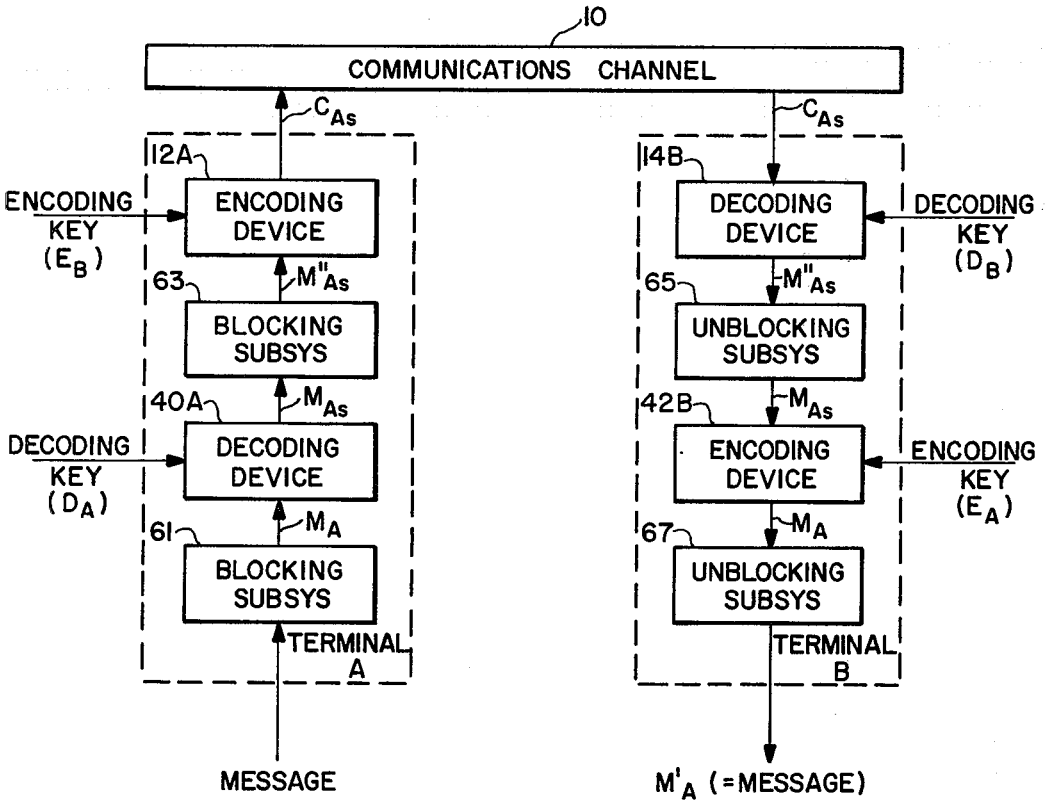
10
COMMUNICATIONS CHANNEL
C_{As}
C_{As}
12A
14B
ENCODING KEY (E_B)
ENCODING DEVICE
DECODING DEVICE
DECODING KEY (D_B)
63
M''_{As}
65
M''_{As}
BLOCKING SUBSYS
UNBLOCKING SUBSYS
40A
M_{As}
42B
M_{As}
DECODING KEY (D_A)
DECODING DEVICE
ENCODING DEVICE
ENCODING KEY (E_A)
61
M_A
67
M_A
BLOCKING SUBSYS
UNBLOCKING SUBSYS
TERMINAL A
TERMINAL B
MESSAGE
M'_A (=MESSAGE)

FIG. 7