US005196028A

United States Patent [19]

Portney et al.

[11] Patent Number: 5,196,028

[45] Date of Patent: Mar. 23, 1993

[54] HIGH-MAGNIFICATION TELEPHOTO SPECTACLES FOR AGE-RELATED MACULAR DEGENERATION

[75] Inventors: **Valdemar Portney**, Irvine, Calif.; **Jeffrey E. Koziol**, Arlington Hgts., Ill.

[73] Assignee: **Allergan, Inc.**, Irvine, Calif.

[21] Appl. No.: **730,471**

[22] Filed: **Jul. 16, 1991**

Related U.S. Application Data

[60] Continuation-in-part of Ser. No. 690,814, Apr. 23, 1991, Pat. No. 5,088,809, which is a division of Ser. No. 141,482, Jan. 5, 1988, Pat. No. 5,030,231.

[51] **Int. Cl.**[5] **A61F 2/16**; G02C 1/00

[52] **U.S. Cl.** **623/6**; 351/41; 351/158

[58] **Field of Search** 623/6; 350/145, 204; 351/41, 158, 167

[56] **References Cited**

U.S. PATENT DOCUMENTS

2,024,322	12/1935	Wittig	351/158 X
2,389,428	11/1945	Glasser	351/158
3,273,456	9/1966	Feinbloom	351/158 X
4,074,368	2/1978	Levy, Jr. et al.	623/6
4,155,626	5/1979	Grech	351/41 X
4,540,238	9/1985	Edwards .	
4,637,696	1/1987	Wilkins	351/41
4,666,446	5/1987	Koziol et al.	623/6
4,710,197	12/1987	Donn et al.	623/6
4,863,468	9/1989	Feinbloom et al.	623/6
4,957,506	9/1990	Mercier	623/6

FOREIGN PATENT DOCUMENTS

63-321	6/1986	Japan .
WO87/04264	7/1987	PCT Int'l Appl. .
400610	4/1966	Switzerland .

OTHER PUBLICATIONS

"Use of Low-Magnification Telescopes As Optometers in Low Vision", George Woo, O.D., Ph.D., *Optometric Monthly*, pp. 174–151, May 1978.

Primary Examiner—Ronald Frinks

Attorney, Agent, or Firm—Gordon L. Peterson

[57] **ABSTRACT**

A ophthalmic lens system comprising an intraocular lens adapted for implantation in the eye and spectacles. The intraocular lens has a negative IOL portion. The spectacles include a positive lens system for directing light toward the negative lens portion of the intraocular lens. The positive lens system includes a positive lens and a negative lens, with the negative lens being located posteriorly of the positive lens.
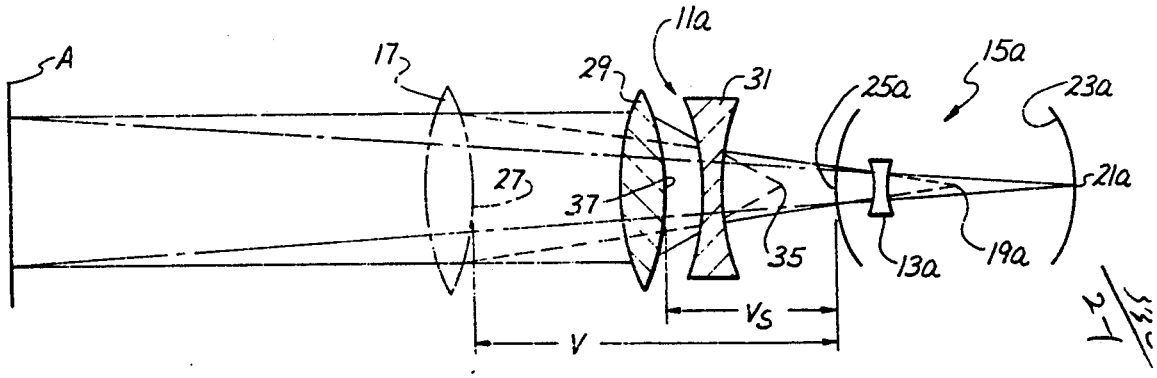
10 Claims, 2 Drawing Sheets