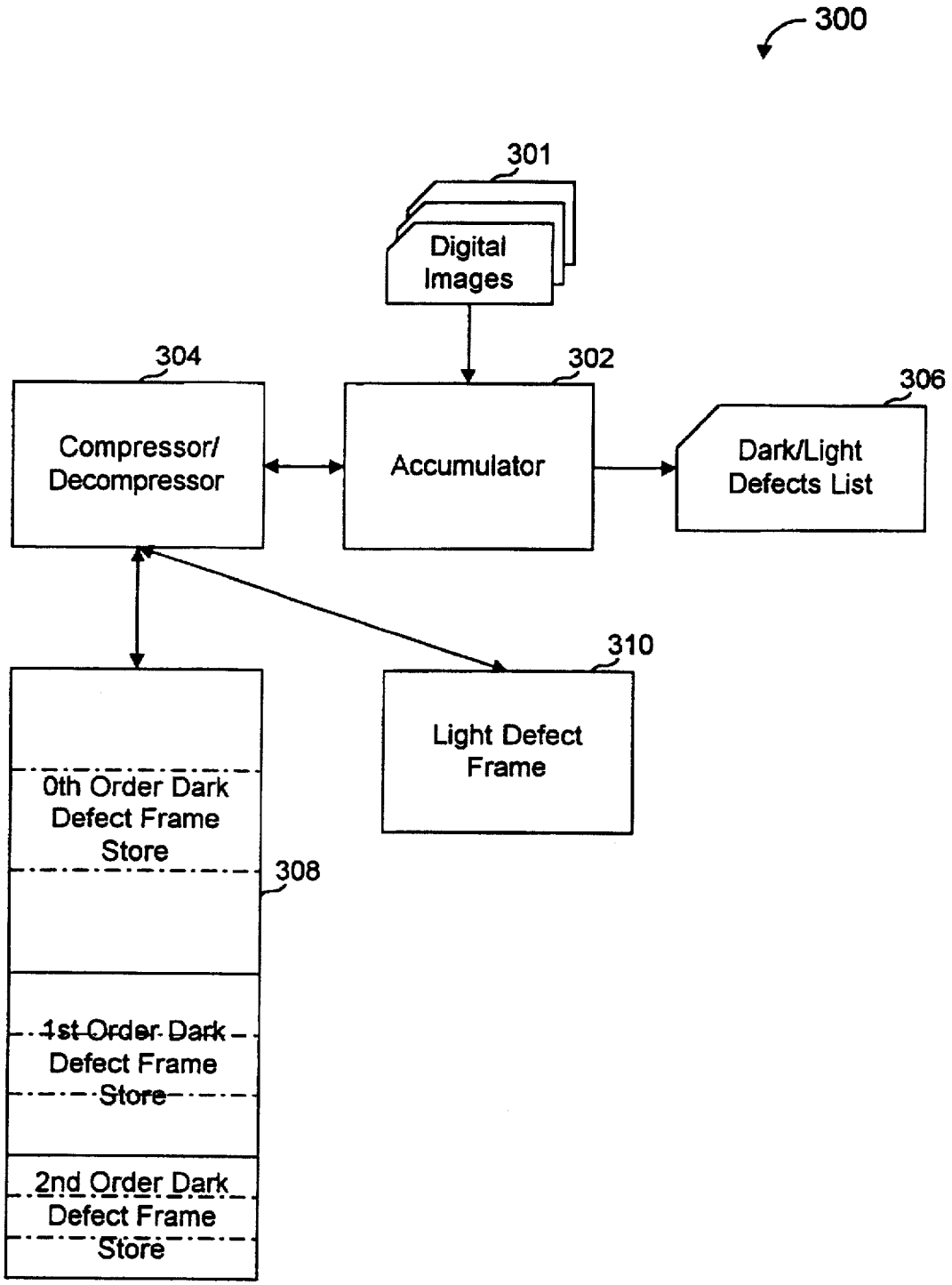
300
301
Digital Images
304
Compressor/ Decompressor
302
Accumulator
306
Dark/Light Defects List
310
Light Defect Frame
0th Order Dark Defect Frame Store
308
1st Order Dark Defect Frame Store
2nd Order Dark Defect Frame Store

Fig. 9