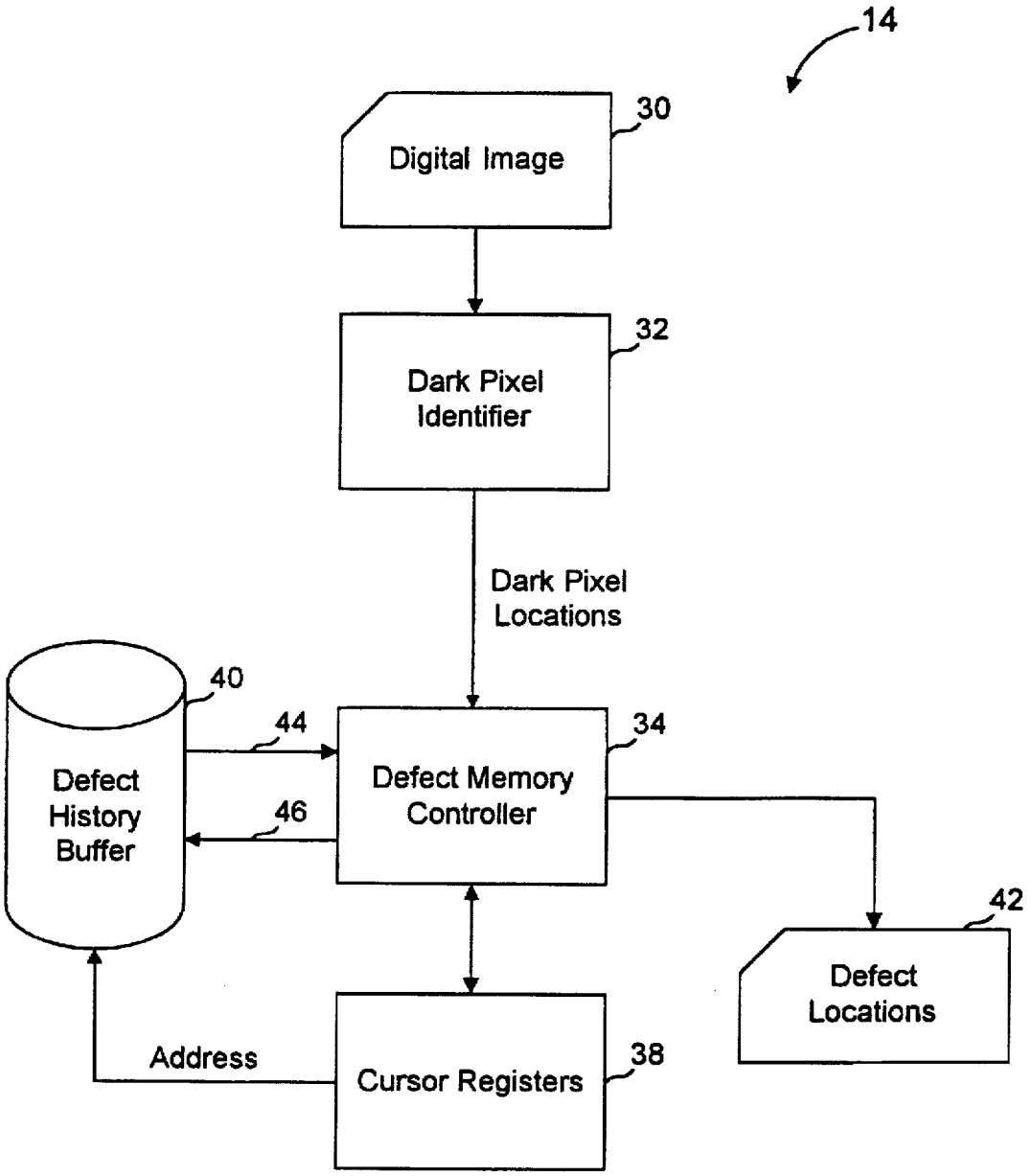
14
Digital Image
30
Dark Pixel Identifier
32
Dark Pixel Locations
40
44
Defect History Buffer
46
Defect Memory Controller
34
42
Defect Locations
Address
Cursor Registers
38

Fig. 2