Nov. 20, 1945. C. J. GLASSER 2,389,428

COMBINED SPECTACLE AND TELESCOPE

Filed May 23, 1945

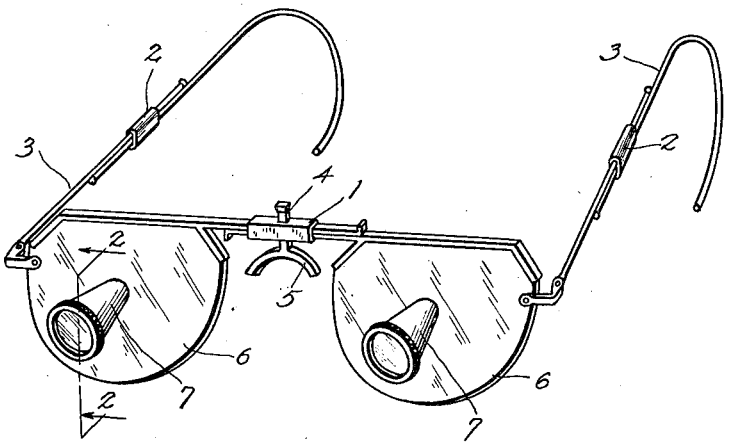

Fig. 1.

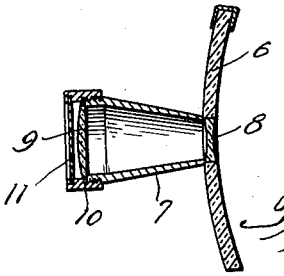

Fig. 2.

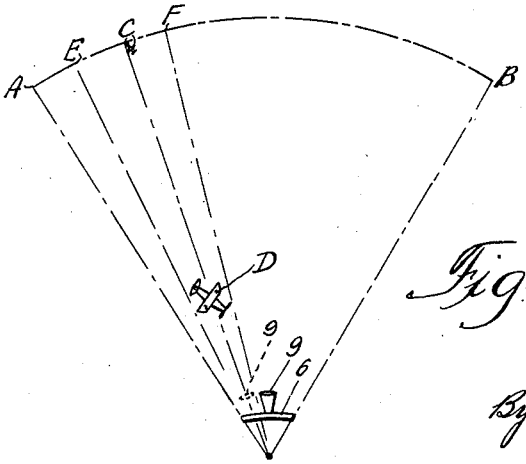

Fig. 4.

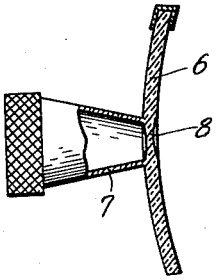

Fig. 3.

Inventor:
Charles J. Glasser:
By: Thiess, Olson & Mecklenburger.
Attys.