US009987028B2

(12) **United States Patent**
Lowinger et al.

(10) **Patent No.: US 9,987,028 B2**
(45) **Date of Patent: Jun. 5, 2018**

(54) **PARTIALLY COVERED BRAIDED FUNNEL ASPIRATION CATHETER**

(71) Applicant: **Cook Medical Technologies LLC**, Bloomington, IN (US)

(72) Inventors: **Johan Lowinger**, Bloomington, IN (US); **James Merk**, Terre Haute, IN (US)

(73) Assignee: **Cook Medical Technologies LLC**, Bloomington, IN (US)

(*) Notice: Subject to any disclaimer, the term of this patent is extended or adjusted under 35 U.S.C. 154(b) by 109 days.

(21) Appl. No.: **15/010,398**

(22) Filed: **Jan. 29, 2016**

(65) **Prior Publication Data**

US 2017/0215900 A1 Aug. 3, 2017

(51) **Int. Cl.**
A61B 17/221 (2006.01)
A61B 17/22 (2006.01)

(52) **U.S. Cl.**
CPC ***A61B 17/221*** (2013.01); *A61B 2017/2215* (2013.01); *A61B 2017/22079* (2013.01)

(58) **Field of Classification Search**
CPC A61B 17/221; A61B 17/22031; A61B 2017/2215; A61B 2017/22079
See application file for complete search history.

(56) **References Cited**

U.S. PATENT DOCUMENTS

6,221,006 B1 4/2001 Dubrul et al.
6,238,412 B1 5/2001 Dubrul et al.
6,695,858 B1 2/2004 Dubrul et al.
6,699,260 B2 3/2004 Dubrul et al.
7,972,353 B2 7/2011 Hendriksen et al.
2004/0260333 A1 12/2004 Dubrul et al.
2005/0113804 A1 5/2005 von Lehe et al.
2006/0058836 A1* 3/2006 Bose A61B 17/22 606/200
2011/0166637 A1 7/2011 Irwin et al.
2014/0155981 A1 6/2014 Ferrera et al.

FOREIGN PATENT DOCUMENTS

WO 2009077203 A2 6/2009
WO WO 2009077203 A2 6/2009
WO 2009132858 A2 11/2009
WO WO 2009132858 A2 11/2009

OTHER PUBLICATIONS

Cardinal IP Patent Search Report, dated Jun. 27, 2014.
Partially Covered Braided Funnel Aspiration Catheter, Cardinal IP Patent Search Report, dated Jun. 27, 2014.

* cited by examiner

Primary Examiner — Diane Yabut
(74) *Attorney, Agent, or Firm* — Kevin L. Leffel

(57) **ABSTRACT**

Methods and devices are described for removing a blockage from an anatomical passageway, for example thrombus or clot from a blood vessel. Devices and methods are provided for removing a blockage from an anatomical passageway. For example, a braided funnel is provided that may be placed adjacent a blockage. The braided funnel may be attached to an elongate tube and the blockage may be aspirated through the tube.
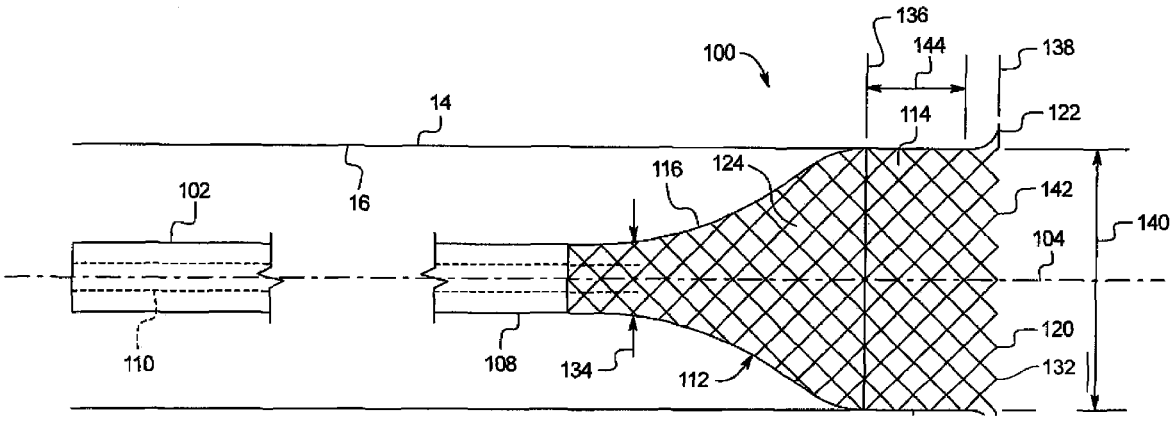
20 Claims, 8 Drawing Sheets