May 2, 1961 R. S. SHELTON 2,982,528

VAPOR FUEL SYSTEM

Filed June 13, 1958 2 Sheets-Sheet 2

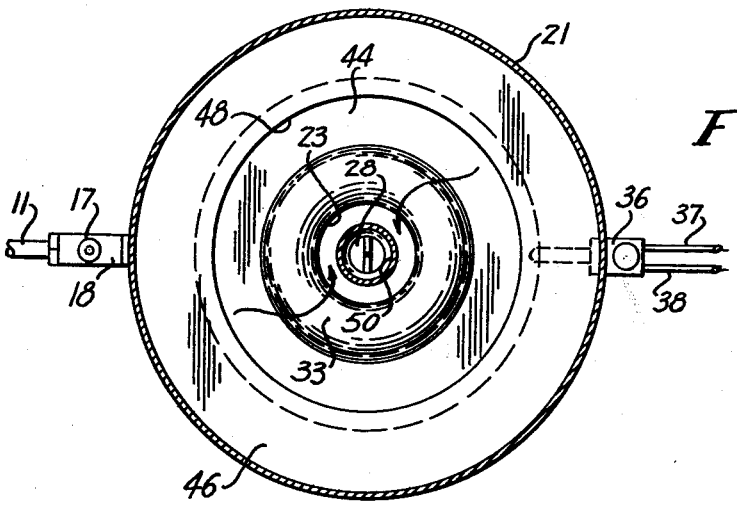

FIG. 4

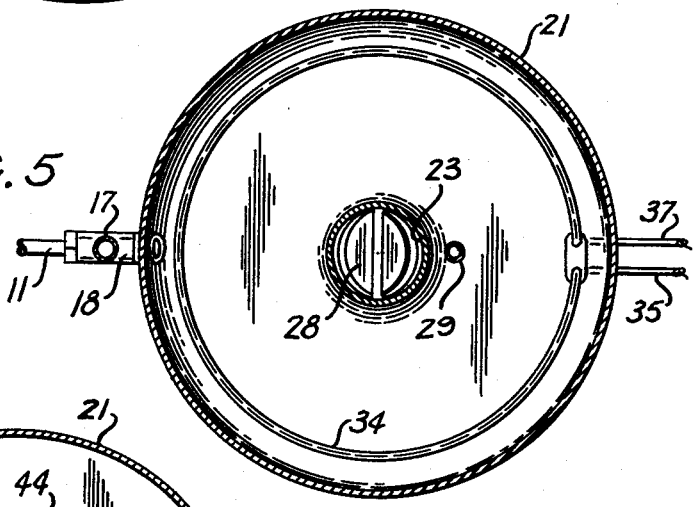

FIG. 5

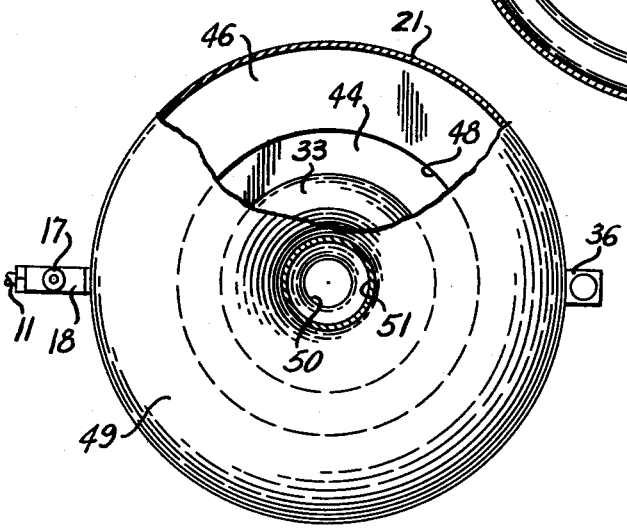

FIG. 3

INVENTOR.
ROBERT S. SHELTON
BY Patrick D. Beavers
ATTY.