US006381128B1

(12) **United States Patent**
Kramer

(10) **Patent No.: US 6,381,128 B1**
(45) **Date of Patent: Apr. 30, 2002**

(54) **ERGONOMIC PORTABLE COMPUTER**

(76) Inventor: **Russel G. Kramer**, 33 Ranch Rd., Falmouth, MA (US) 02536

(*) Notice: Subject to any disclaimer, the term of this patent is extended or adjusted under 35 U.S.C. 154(b) by 0 days.

(21) Appl. No.: **09/617,631**

(22) Filed: **Jul. 17, 2000**

(51) **Int. Cl.**[7] **G06F 1/16**

(52) **U.S. Cl.** **361/683**; 361/679; 361/682; 361/683; 361/684; 361/685; 361/686; 361/724; 361/725; 361/726; 361/727; 361/728; 361/729; 361/730; 361/731; 361/732; 361/733; 361/735; 361/736; 361/737; 361/740; 361/741; 361/742; 361/747; 361/748; 361/752; 361/753; 361/756; 361/759; 312/223.1; 312/223.2; 312/223.3; 364/708; 364/708.1

(58) **Field of Search** 361/679, 682–686, 361/724–733, 735, 736, 737, 740, 741, 742, 747, 748, 752, 753, 756, 759; 312/223.1, 223.2; 364/708.1, 708

(56) **References Cited**

U.S. PATENT DOCUMENTS

4,509,873 A		4/1985	Ryan	
4,739,451 A		4/1988	Kuba	
4,931,978 A	*	6/1990	Drake et al.	364/708
5,016,849 A		5/1991	Wu	
5,067,834 A		11/1991	Szmanda et al.	
5,107,402 A		4/1992	Malgouires	
5,196,993 A		3/1993	Herron et al.	
5,206,790 A		4/1993	Thomas et al.	
5,229,920 A		7/1993	Spaniol et al.	
5,255,214 A		10/1993	Ma	
5,319,582 A		6/1994	Ma	
5,335,142 A		8/1994	Anderson	
5,345,362 A		9/1994	Winkler	
5,347,630 A		9/1994	Ishizawa et al.	
D358,374 S		5/1995	Yamazaki	
5,596,481 A		1/1997	Liu et al.	
5,644,338 A		7/1997	Bowens	
5,697,594 A		12/1997	Adams et al.	
5,729,429 A		3/1998	Margaritis et al.	
5,745,340 A		4/1998	Landau	
5,764,474 A		6/1998	Youens	
5,774,329 A		6/1998	Kuo	
5,796,576 A		8/1998	Kim	
5,805,415 A		9/1998	Tran et al.	
5,812,371 A		9/1998	Chen et al.	
5,825,612 A		10/1998	Aubuchon et al.	
6,128,186 A	*	10/2000	Feierbach	361/683

* cited by examiner

Primary Examiner—Leo P. Picard
Assistant Examiner—Yean-Hsi Chang
(74) *Attorney, Agent, or Firm*—John P. McGonagle

(57) **ABSTRACT**

A portable computer having a main computer body and a keyboard unit slidably attached to the main computer body and movable to various positions in front of the main computer body. A display unit is also slidably attached to the main computer body and movable to various positions up and away from the computer main body.
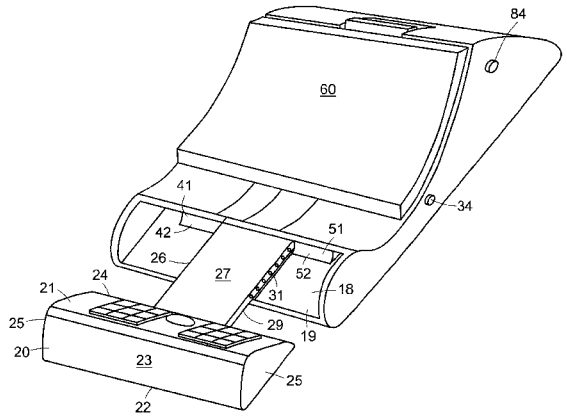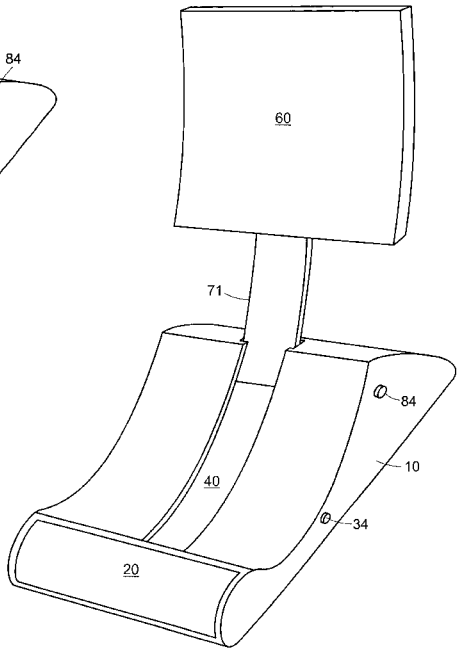
8 Claims, 20 Drawing Sheets