G. P. KNAPP.

SEPARABLE ATTACHMENT PLUG.

APPLICATION FILED JAN. 11, 1915.

1,179,728. Patented Apr. 18, 1916.

Fig. 1

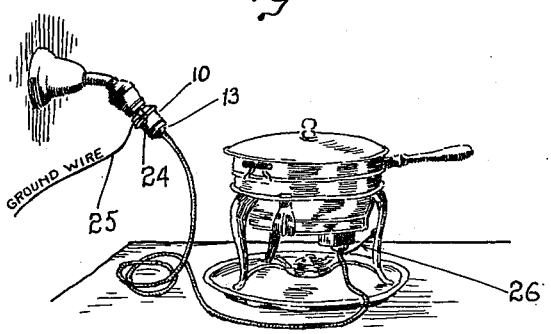

Fig. 3

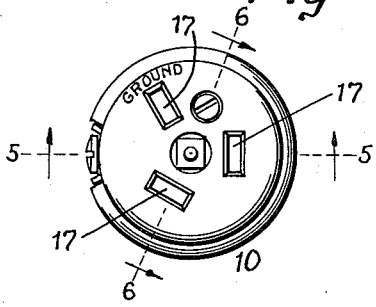

Fig. 2

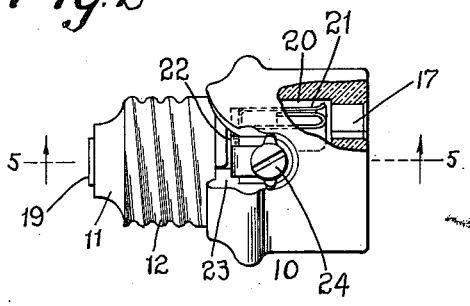

Fig. 4

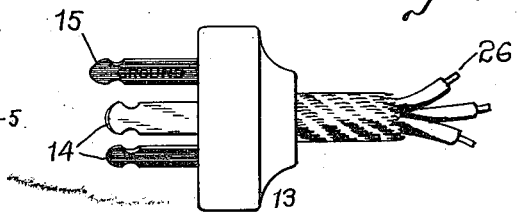

Fig. 5

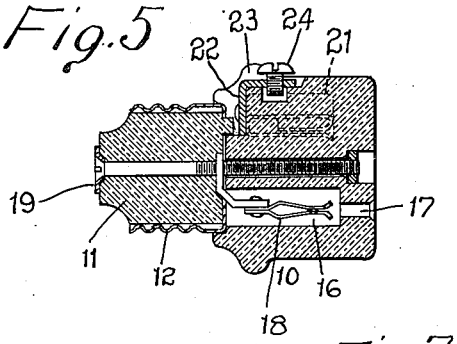

Fig. 6

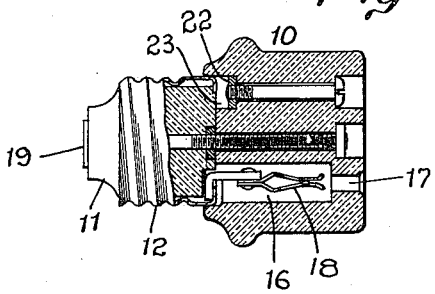

Fig. 7

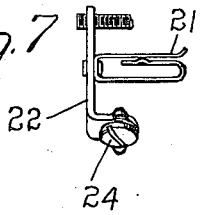

WITNESSES:

H. W. Meade

E. M. Culver

INVENTOR

George P. Knapp

BY

A. M. Wooster

ATTORNEY