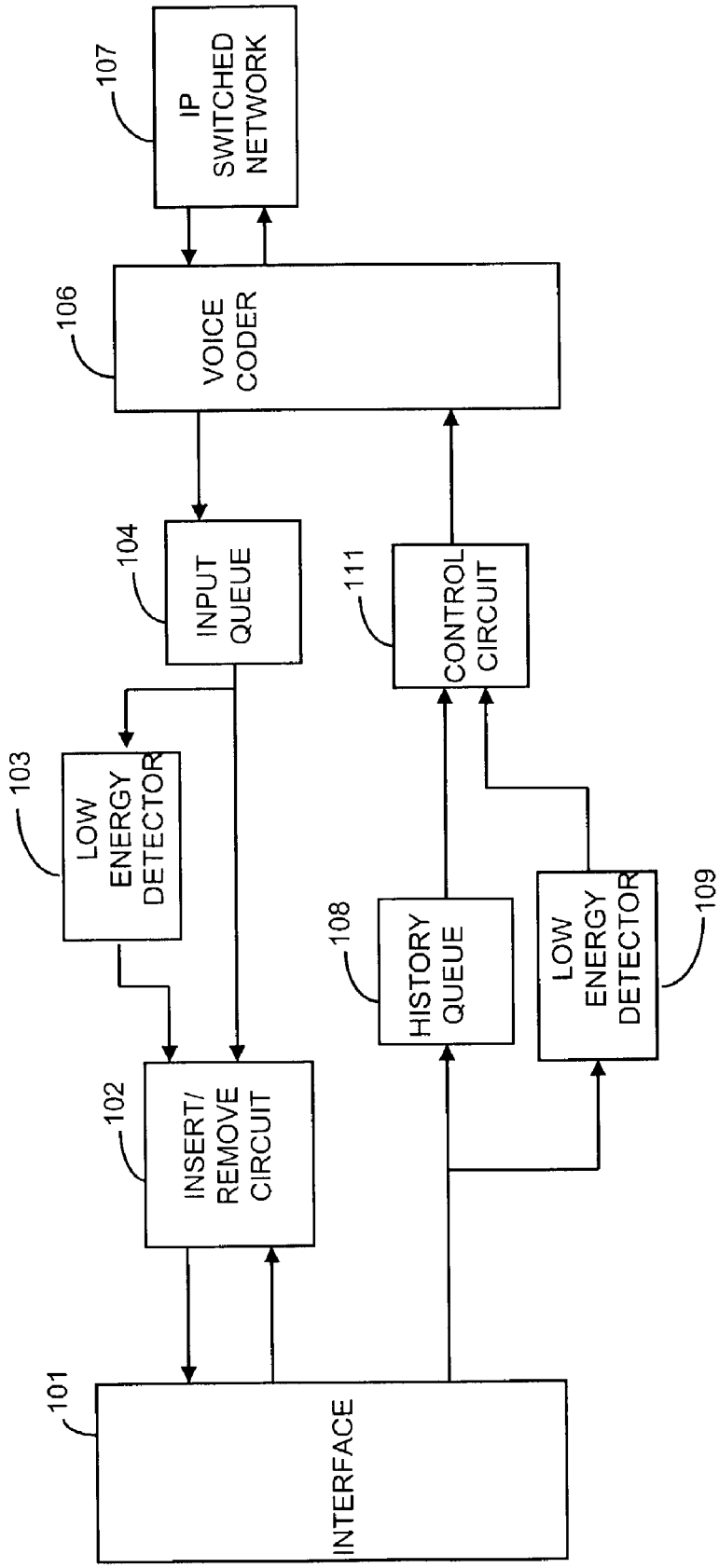
107
IP SWITCHED NETWORK
106
VOICE CODER
104
INPUT QUEUE
111
CONTROL CIRCUIT
103
LOW ENERGY DETECTOR
108
HISTORY QUEUE
LOW ENERGY DETECTOR
109
102
INSERT/ REMOVE CIRCUIT
101
INTERFACE

FIG. 1