Feb. 23, 1937. L. T. COOPER 2,072,028

HINGE

Filed March 23, 1936

FIG. 1.

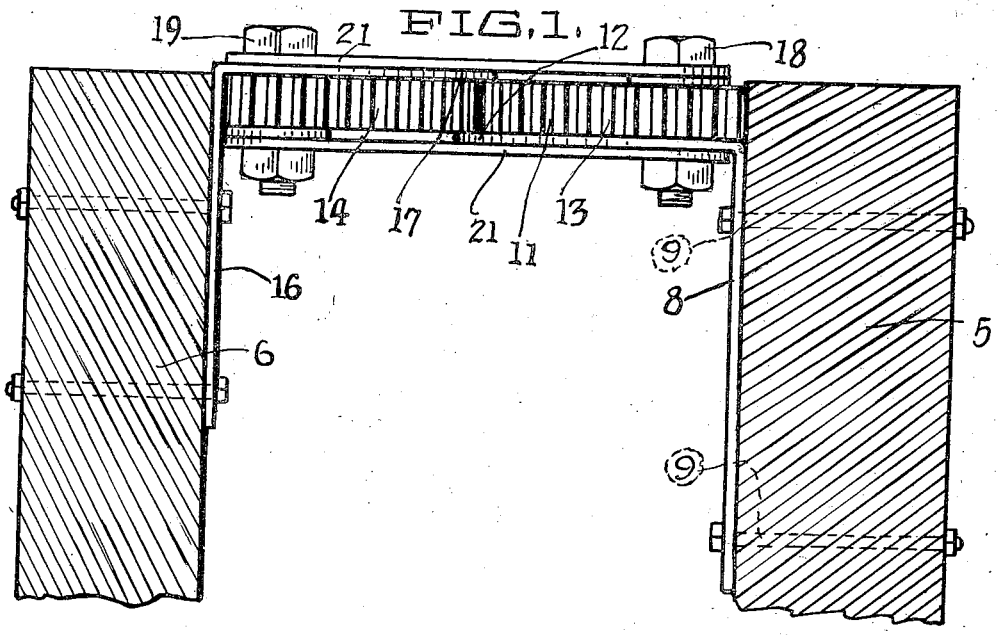

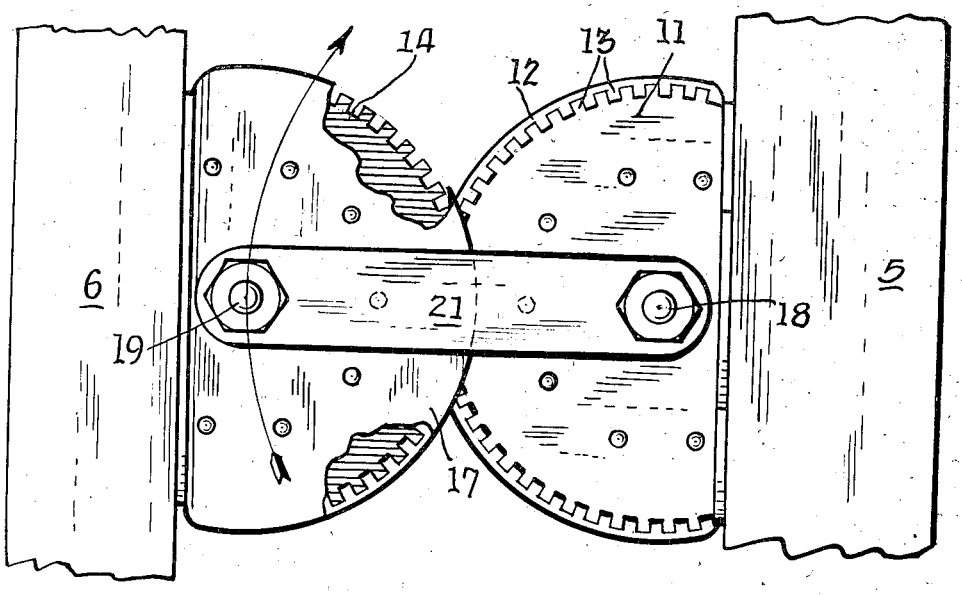

FIG. 2.

INVENTOR.
LEROY T. COOPER,
BY Victor J. Evans & Co.
ATTORNEYS.