310-13 SR
FIP8502 XR 3,470,828

Oct. 7, 1969 J. R. POWELL, JR., ET AL 3,470,828

ELECTROMAGNETIC INDUCTIVE SUSPENSION AND STABILIZATION SYSTEM FOR A GROUND VEHICLE

Filed Nov. 21, 1967 8 Sheets-Sheet 1

FIG. 1

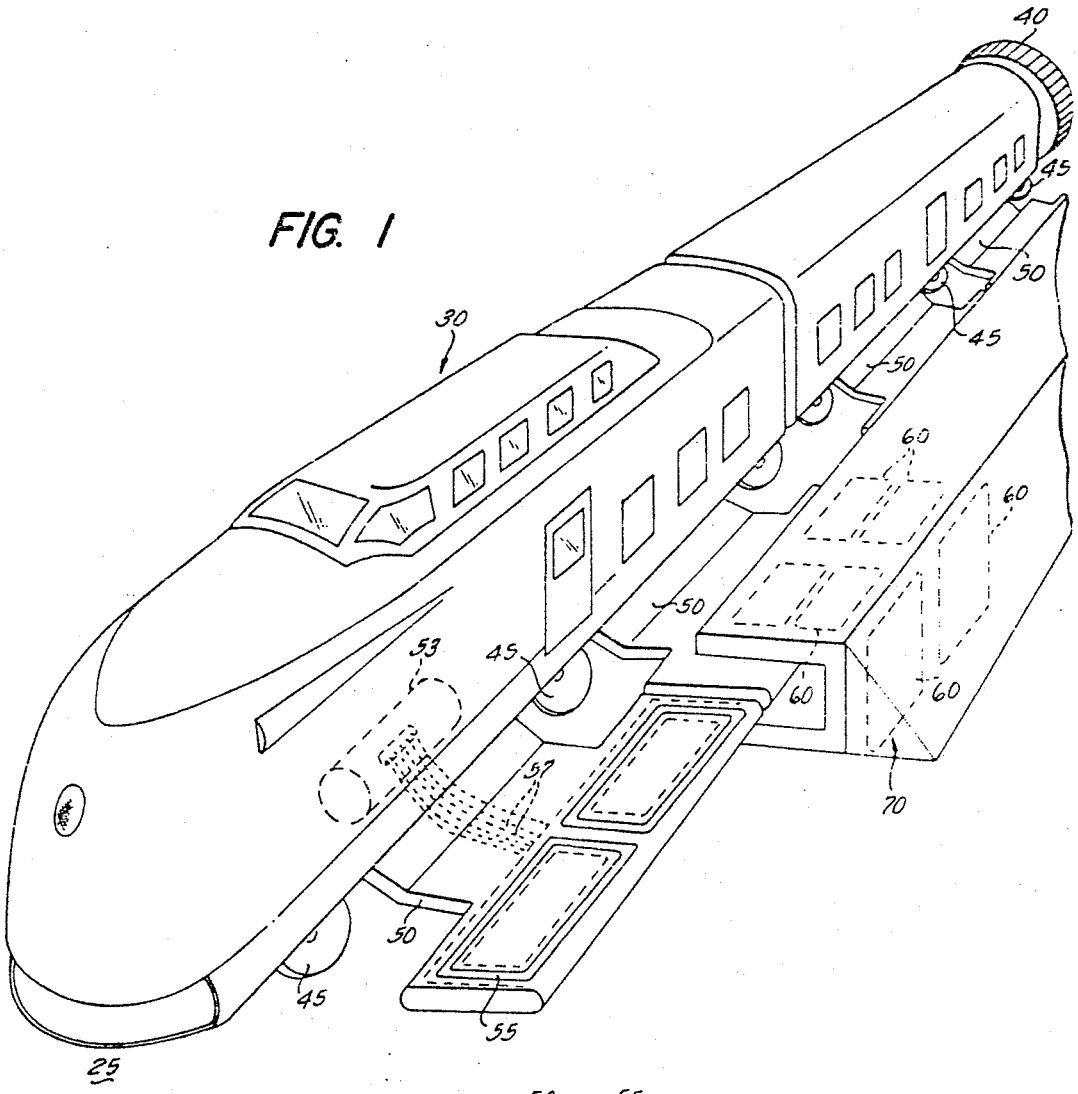

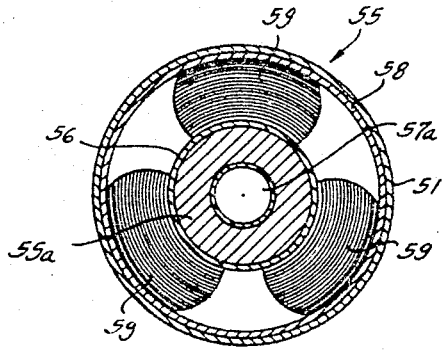

FIG. 1a