US007469628B2

(12) **United States Patent**
Mandralis et al.

(10) **Patent No.: US 7,469,628 B2**
(45) **Date of Patent: Dec. 30, 2008**

(54) **DEVICE FOR PREPARING A DRINK FROM A CAPSULE BY INJECTION OF A PRESSURIZED FLUID AND CAPSULE-HOLDER ADAPTED THEREFORE**

(75) Inventors: **Zenon Ioannis Mandralis**, Chexbres (CH); **Alfred Yoakim**, St-Legier-La Chiesaz (CH); **Jean-Paul Denisart**, La Conversion (CH); **Jean-Luc Denisart**, Cully (CH); **Hans Peter Pleisch**, Corseaux (CH)

(73) Assignee: **Nestec S.A.**, Vevey (CH)

(*) Notice: Subject to any disclaimer, the term of this patent is extended or adjusted under 35 U.S.C. 154(b) by 0 days.

(21) Appl. No.: **11/828,774**

(22) Filed: **Jul. 26, 2007**

(65) **Prior Publication Data**

US 2007/0272084 A1 Nov. 29, 2007

Related U.S. Application Data

(63) Continuation of application No. PCT/EP2006/000944, filed on Feb. 3, 2006.

(51) **Int. Cl.**
A47J 31/00 (2006.01)

(52) **U.S. Cl.** **99/295**; 99/279

(58) **Field of Classification Search** 99/452–455, 99/279–323, 495, 516, 536, 275–277; 426/77, 426/112, 433; 222/83.5; 137/1, 132, 142; 347/85

See application file for complete search history.

(56) **References Cited**

U.S. PATENT DOCUMENTS

3,260,190	A	7/1966	Levinson	99/295
3,754,463	A *	8/1973	Vernooy	99/295
3,878,772	A *	4/1975	Nordskog	99/295
4,738,378	A *	4/1988	Oakley et al.	222/82
5,111,740	A *	5/1992	Klein	99/295
5,242,702	A *	9/1993	Fond	426/433
5,325,765	A *	7/1994	Sylvan et al.	99/295
6,766,817	B2	7/2004	da Silva	137/1
6,918,404	B2	7/2005	Dias da Silva	137/132
7,066,586	B2	6/2006	da Silva	347/85
2003/0066431	A1	4/2003	Fanzutti et al.	99/279
2003/0071056	A1	4/2003	Hale	222/83
2003/0217644	A1	11/2003	Jarisch et al.	99/179

FOREIGN PATENT DOCUMENTS

EP	1 092 376 A2	4/2001
EP	1 502 528 A1	2/2002
EP	01 440 638 A1	7/2004
WO	WO 97/43937	4/1997
WO	WO 03/059778 A2	7/2003
WO	WO 2004/006740 A2	1/2004

* cited by examiner

Primary Examiner—Timothy F. Simone
(74) *Attorney, Agent, or Firm*—Winston & Strawn LLP

(57) **ABSTRACT**

Device for preparation of a drink from a food substance contained in a capsule (**6**) comprising a fluid supply unit (**5**) comprising fluid supply means (**50**); a capsule holder (**4**) configured to receive a capsule (**6**). The capsule holder is removable from the fluid supply unit and can comprise a fluid injector (**70**) for inserting fluid into the capsule.
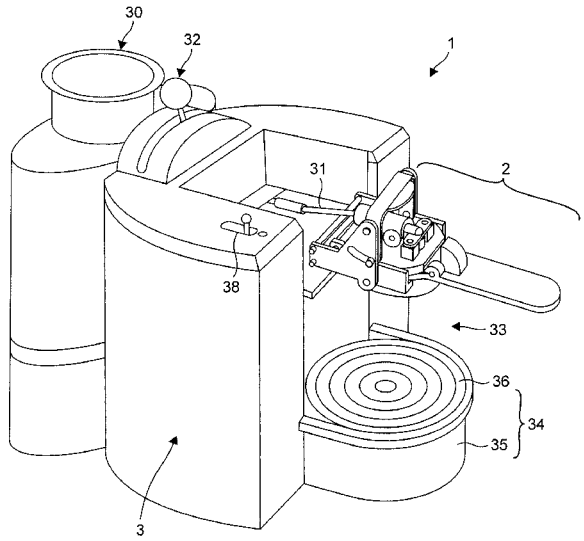
26 Claims, 22 Drawing Sheets