Dec. 18, 1962

R. ELLIS

BOAT STEERING, ANCHOR CONTROL, AND DEPTH MEASURING DEVICE

Filed Feb. 25, 1960

3,068,828

FIG. 1

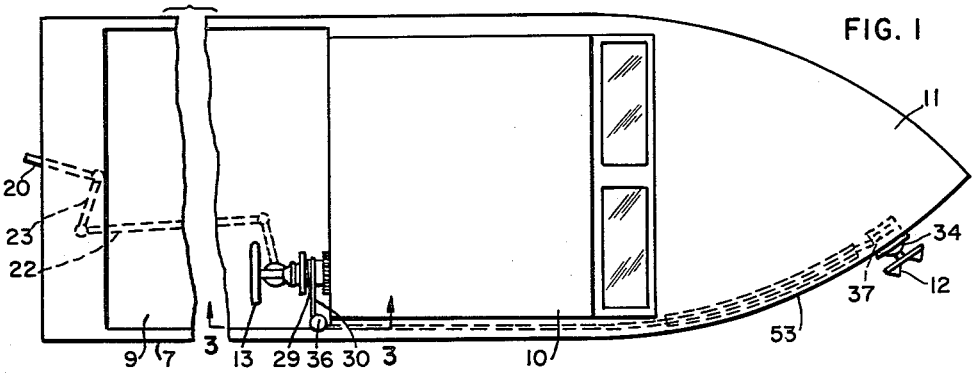

FIG. 2

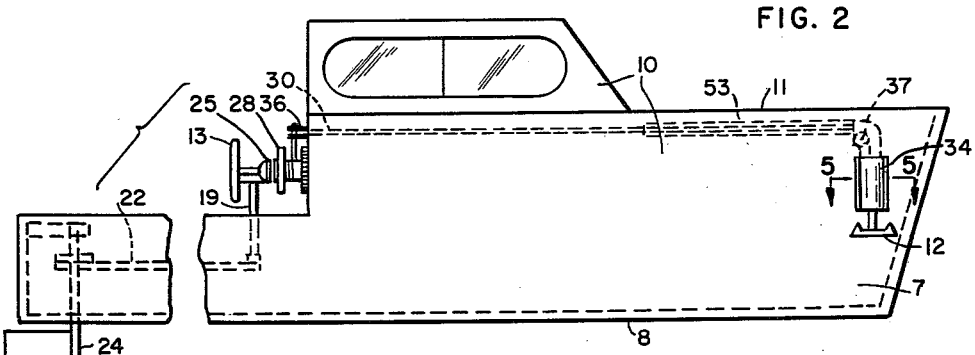

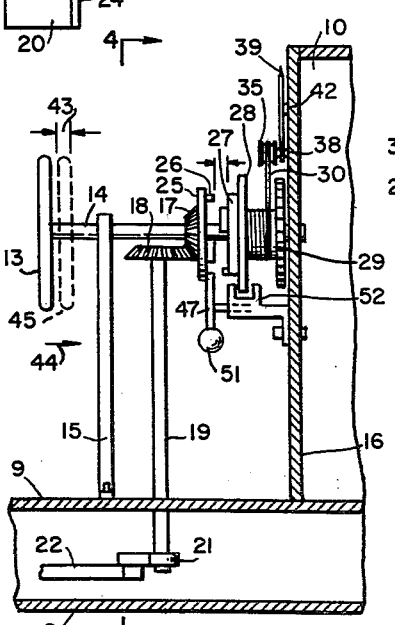

FIG. 3

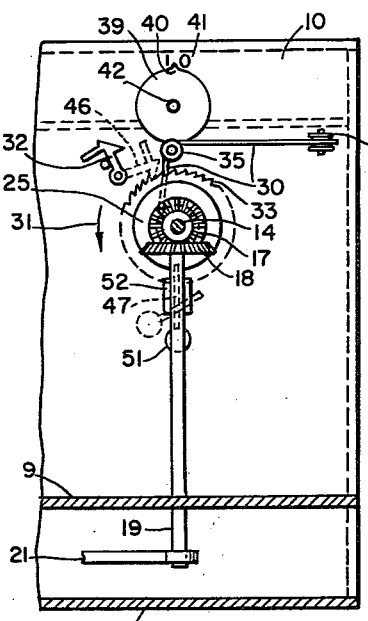

FIG. 4

FIG. 5

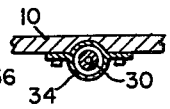

FIG. 6

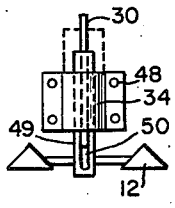

INVENTOR

Robert Ellis