Feb. 21, 1928. 1,659,928

P. M. TOWNSEND

HINGE CONNECTION FOR SECTIONAL DOORS

Filed April 21. 1927

Fig. 1.

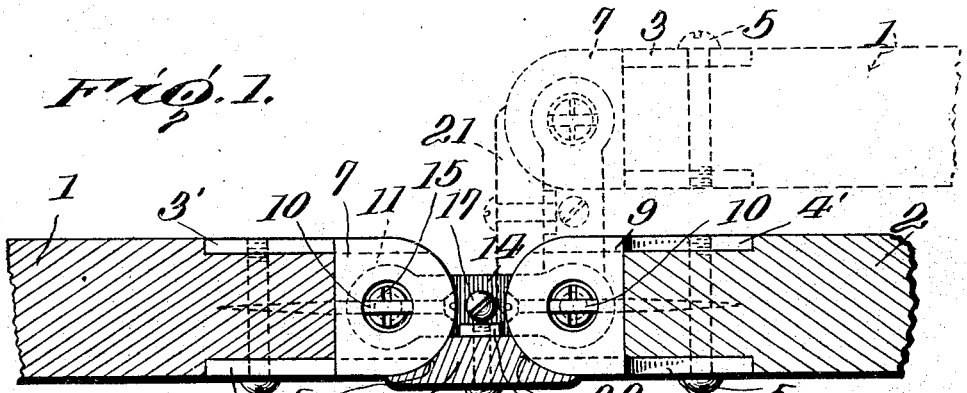

Fig. 2.

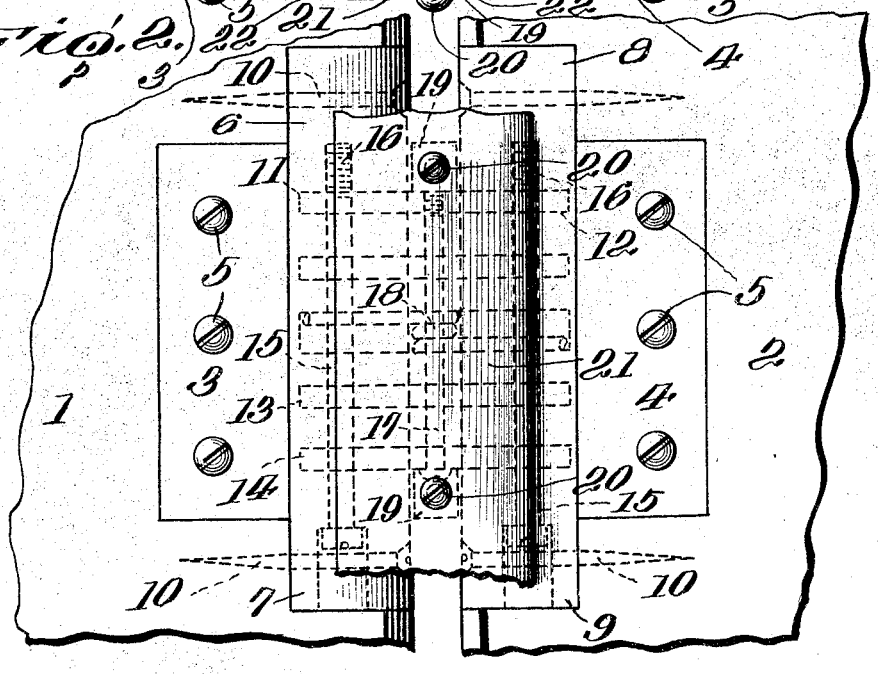

Fig. 3.

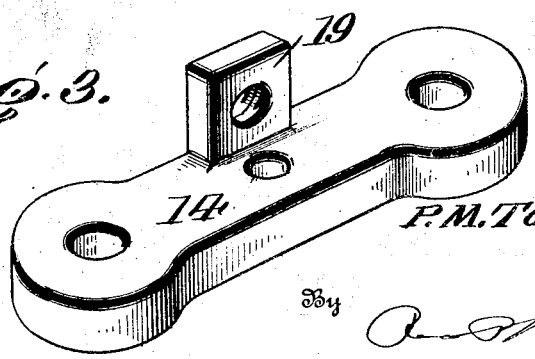

Inventor

P. M. Townsend.

By

Attorney