US008350728B2

(12) **United States Patent**
Liu et al.

(10) **Patent No.: US 8,350,728 B2**
(45) **Date of Patent: Jan. 8, 2013**

(54) **KEYBOARD WITH INTEGRATED AND NUMERIC KEYPAD**

(75) Inventors: **Eric Liu**, Santa Clara, CA (US); **Manjirnath Chatterjee**, San Francisco, CA (US)

(73) Assignee: **Hewlett-Packard Development Company, L.P.**, Houston, TX (US)

(*) Notice: Subject to any disclaimer, the term of this patent is extended or adjusted under 35 U.S.C. 154(b) by 347 days.

(21) Appl. No.: **12/766,828**

(22) Filed: **Apr. 23, 2010**

(65) **Prior Publication Data**

US 2011/0260891 A1 Oct. 27, 2011

(51) **Int. Cl.**
H03M 11/00 (2006.01)

(52) **U.S. Cl.** **341/22**; 341/23; 345/168; 345/169; 345/170; 345/171; 345/172

(58) **Field of Classification Search** 341/22, 341/23; 345/168–172
See application file for complete search history.

(56) **References Cited**

U.S. PATENT DOCUMENTS

1,718,694	A	6/1929	Kurowski
3,396,827	A	8/1968	Harwell
3,744,034	A	7/1973	Paul
3,937,952	A	2/1976	Ripley et al.
4,022,993	A	5/1977	Shattuck
4,060,703	A	11/1977	Everett
4,180,336	A	12/1979	Lonsdale
4,196,666	A	4/1980	Kobayashi et al.
4,237,351	A	12/1980	Boulanger et al.
4,320,268	A	3/1982	Brown
4,359,612	A	11/1982	Rooney
4,359,613	A	11/1982	Rooney
4,559,705	A	12/1985	Hodge et al.
4,564,751	A	1/1986	Alley et al.
RE32,419	E	5/1987	Rooney
4,679,951	A	7/1987	King et al.
4,762,227	A	8/1988	Patterson
4,802,210	A	1/1989	Spencer et al.
4,847,798	A	7/1989	Kurashima
4,860,372	A	8/1989	Kuzunuki et al.
4,916,441	A	4/1990	Gombrich
4,972,051	A	11/1990	Hodsdon
4,972,496	A	11/1990	Sklarew

(Continued)

FOREIGN PATENT DOCUMENTS

DE 10203400 6/2003

(Continued)

OTHER PUBLICATIONS

U.S. Appl. No. 12/395,535, filed Mar. 16, 2009, Skillman et al.

(Continued)

Primary Examiner — Linh Nguyen
(74) *Attorney, Agent, or Firm* — Mahamedi Paradice Kreisman LLP; Van Mahamedi

(57) **ABSTRACT**

A keypad includes a plurality of keys, and a processor that is coupled to control use of the keypad, including to enable use of the keypad in each of a letter entry mode or an alternative entry mode. The plurality of keys include a subset of keys, each key in the subset being (i) enlarged as compared to other keys of the keypad that are not part of the subset, (ii) assigned m letter values for when the keypad is operated in the letter entry mode, and (iii) assigned n numeric values, where $1 \leqq n < m$, for when the keypad is operated in the alternative entry mode.
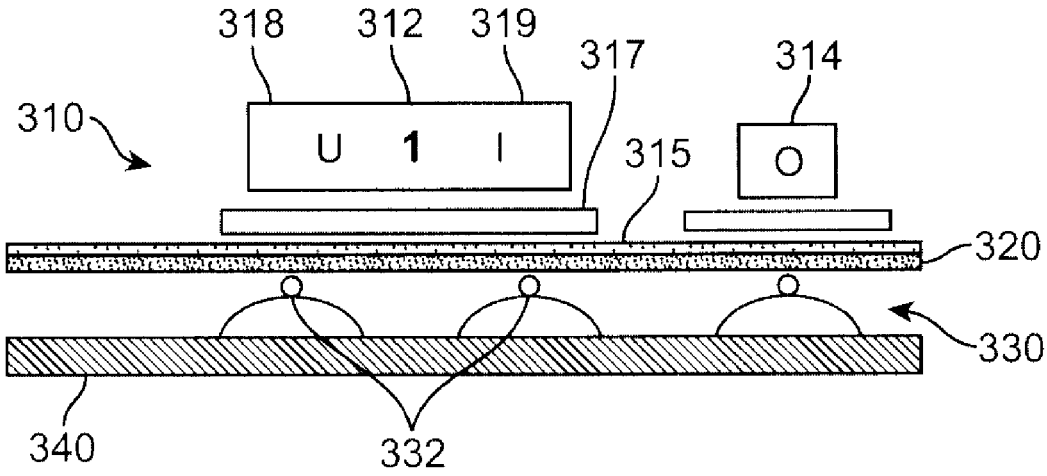
19 Claims, 5 Drawing Sheets