US009636228B2

(12) **United States Patent**
Leibel

(10) **Patent No.: US 9,636,228 B2**
(45) **Date of Patent: May 2, 2017**

(54) **RADIAL HEAD IMPLANT**

(75) Inventor: **David A. Leibel**, Princeton, MN (US)

(73) Assignee: **Howmedica Osteonics Corp.**, Mahwah, NJ (US)

(*) Notice: Subject to any disclaimer, the term of this patent is extended or adjusted under 35 U.S.C. 154(b) by 569 days.

(21) Appl. No.: **12/029,429**

(22) Filed: **Feb. 11, 2008**

(65) **Prior Publication Data**

US 2008/0288079 A1 Nov. 20, 2008

Related U.S. Application Data

(60) Provisional application No. 60/889,267, filed on Feb. 10, 2007.

(51) **Int. Cl.**

A61F 2/38	(2006.01)
A61F 2/46	(2006.01)
A61B 17/56	(2006.01)
A61F 2/30	(2006.01)

(52) **U.S. Cl.**

CPC ***A61F 2/3804*** (2013.01); ***A61F 2/4637*** (2013.01); *A61F 2/4605* (2013.01); *A61F 2002/305* (2013.01); *A61F 2002/30387* (2013.01); *A61F 2002/30428* (2013.01); *A61F 2002/30481* (2013.01); *A61F 2002/30494* (2013.01); *A61F 2002/30505* (2013.01); *A61F 2002/30576* (2013.01); *A61F 2002/3827* (2013.01)

(58) **Field of Classification Search**

CPC A61F 2/38; A61F 2/42
USPC 623/20.11–20.13, 21.11–21.13; 31/20.11–20.13
See application file for complete search history.

(56) **References Cited**

U.S. PATENT DOCUMENTS

3,651,521	A	3/1972	Devas
3,707,006	A	12/1972	Bokros et al.
3,708,805	A	1/1973	Scales et al.
3,813,699	A	6/1974	Giliberty
3,863,273	A	2/1975	Averill
3,868,730	A	3/1975	Kaufer et al.
3,874,003	A	4/1975	Moser et al.
3,924,276	A	12/1975	Eaton
4,079,469	A	3/1978	Wadsworth
4,106,128	A	8/1978	Greenwald
4,106,130	A	8/1978	Scales
4,131,957	A	1/1979	Bokros
4,172,296	A	10/1979	D'Errico
4,183,104	A	1/1980	Frey

(Continued)

FOREIGN PATENT DOCUMENTS

DE	4331262 A1	3/1995
GB	1567007 A	5/1980
JP	4170948 B2	10/2008

OTHER PUBLICATIONS

International Search Report and Written Opinion for International Patent Application No. PCT/US2008/053606, dated Aug. 15, 2008.

(Continued)

Primary Examiner — Marcia Watkins
(74) *Attorney, Agent, or Firm* — Lerner, David, Littenberg, Krumholz & Mentlik, LLP

(57) **ABSTRACT**

A radial head implant including a head, a stem, and a locking mechanism, whereby the head laterally engages the stem, and an instrument for implanting and removing such implant is described.
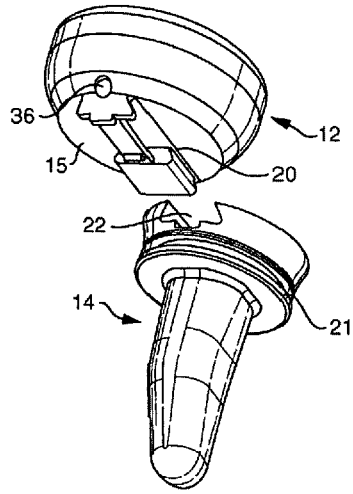
30 Claims, 9 Drawing Sheets