US009636028B2

(12) **United States Patent**
Vetter et al.

(10) **Patent No.: US 9,636,028 B2**
(45) **Date of Patent: May 2, 2017**

(54) **THREE-DIMENSIONAL NEURAL PROBE MICROELECTRODE ARRAY AND METHOD OF MANUFACTURE**

(71) Applicant: **NeuroNexus Technologies, Inc.**, Ann Arbor, MI (US)

(72) Inventors: **Rio J. Vetter**, Van Buren Township, MI (US); **Jamille Farraye Hetke**, Brooklyn, MI (US); **David S. Pellinen**, Ann Arbor, MI (US); **Bencharong Suwarato**, Ann Arbor, MI (US); **Kc Kong**, Ann Arbor, MI (US)

(73) Assignee: **NEURONEXUS TECHNOLOGIES, INC.**, Ann Arbor, MI (US)

(*) Notice: Subject to any disclaimer, the term of this patent is extended or adjusted under 35 U.S.C. 154(b) by 234 days.

(21) Appl. No.: **14/536,867**

(22) Filed: **Nov. 10, 2014**

(65) **Prior Publication Data**

US 2015/0133761 A1 May 14, 2015

Related U.S. Application Data

(60) Provisional application No. 61/901,783, filed on Nov. 8, 2013.

(51) **Int. Cl.**
A61B 5/04 (2006.01)
A61N 1/05 (2006.01)
(Continued)

(52) **U.S. Cl.**
CPC ***A61B 5/04001*** (2013.01); ***A61B 5/0478*** (2013.01); ***A61B 5/6868*** (2013.01);
(Continued)

(58) **Field of Classification Search**
CPC ... A61B 5/0476; A61B 5/0478; A61B 5/6868; A61B 5/6882; A61B 5/04001;
(Continued)

(56) **References Cited**

U.S. PATENT DOCUMENTS

7,647,097 B2 * 1/2010 Flaherty A61B 5/04001 600/544
8,121,697 B2 * 2/2012 Greenberg A61N 1/0543 607/54

(Continued)

FOREIGN PATENT DOCUMENTS

EP 2353636 8/2011

OTHER PUBLICATIONS

McMorland et al. "Baseplate for two-stage cranial monitoring of BMI connectors", J. Neural. Eng.10 (2013), pp. 1-6.*

(Continued)

Primary Examiner — Lee S Cohen
(74) *Attorney, Agent, or Firm* — Haynes and Boone, LLP; Taylor Merritt Meacham

(57) **ABSTRACT**

A three-dimensional neural probe electrode array system is described. Planar probes are microfabricated and electrically connected to flexible micro-machined ribbon cables using a rivet bonding technique. The distal end of each cable is connected to a probe with the proximal end of the cable being customized for connection to a printed circuit board. Final assembly consists of combining multiple such assemblies into a single structure. Each of the two-dimensional neural probe arrays is positioned into a micro-machined platform that provides mechanical support and alignment for each array. Lastly, a micro-machined cap is placed on top of each neural electrode probe and cable assembly to protect them from damage during shipping and subsequent use. The cap provides a relatively planar surface for attachment of a computer controlled inserter for precise insertion into the tissue.
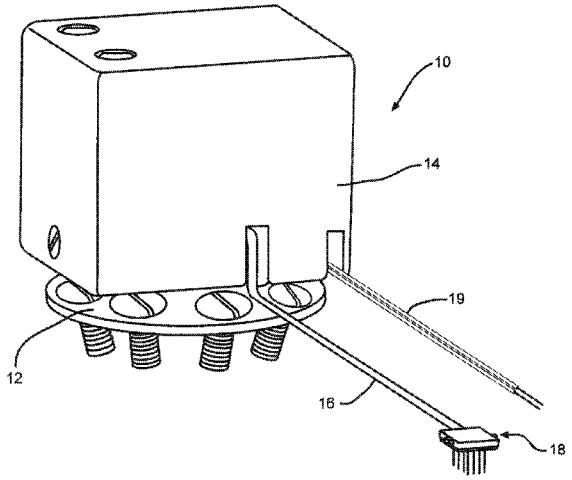
25 Claims, 19 Drawing Sheets