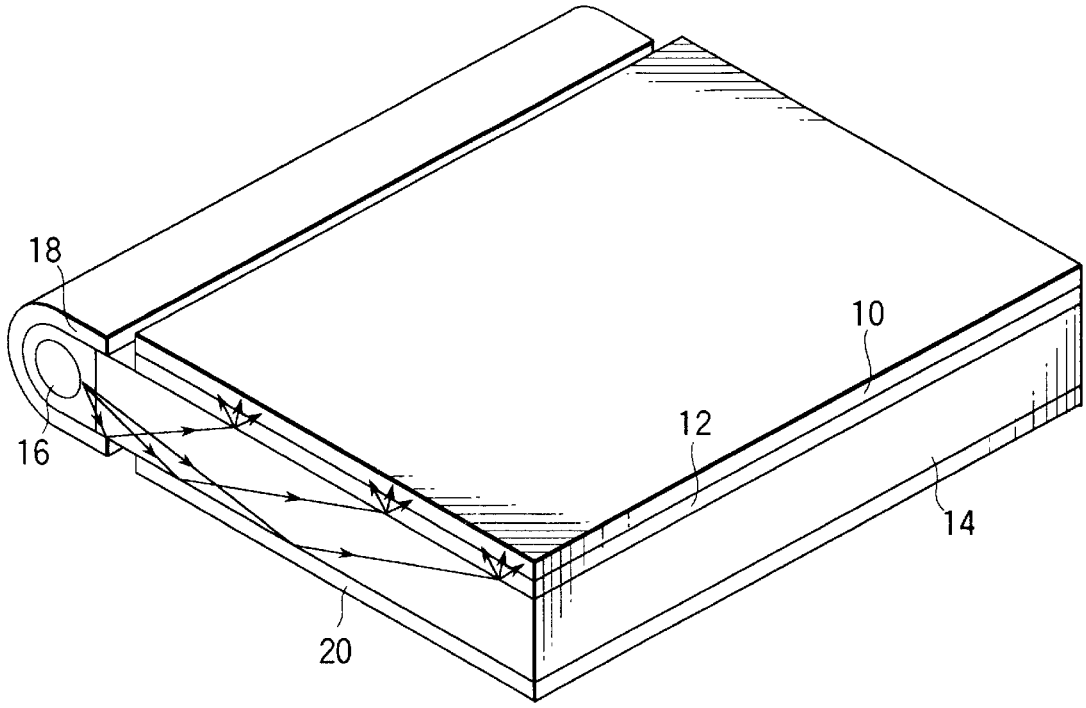

FIG. 1 PRIOR ART