US00D523428S

(12) United States Design Patent

Ozias et al.

(10) Patent No.: US D523,428 S
(45) Date of Patent: ** Jun. 20, 2006

(54) **INFORMATION HANDLING SYSTEM NOTEBOOK**

(75) Inventors: **Orin M. Ozias**, Austin, TX (US); **Steven D. Gluskoter**, Austin, TX (US); **Viorel Luminosu**, Round Rock, TX (US); **Jeffrey Mulhausen**, Austin, TX (US); **Paul J. Noble-Campbell**, Austin, TX (US); **Takahide Okai**, Round Rock, TX (US)

(73) Assignee: **Dell Products L.P.**, Round Rock, TX (US)

(**) Term: **14 Years**

(21) Appl. No.: **29/232,738**

(22) Filed: **Jun. 23, 2005**

(51) **LOC (8) Cl.** **14-02**
(52) **U.S. Cl.** **D14/315**
(58) **Field of Classification Search** ..... D14/315–328, D14/345; D18/1, 2, 7, 11; 235/145 A, 145 R; 341/22, 23; 345/104, 156, 168, 169, 173; 361/680–686, 690–696; 400/486, 489; 349/58; 708/105
See application file for complete search history.

(56) **References Cited**

U.S. PATENT DOCUMENTS

5,898,600 A * 4/1999 Isashi 708/105
5,905,550 A * 5/1999 Ohgami et al. 349/58
6,067,224 A * 5/2000 Nobuchi 361/683
D480,394 S 10/2003 Skinner et al. D14/318
D481,386 S * 10/2003 Kondo D14/318
D491,177 S 6/2004 Andre et al. D14/318
D495,326 S 8/2004 Horiki D14/318
D498,753 S 11/2004 Yamada D14/328
D500,316 S * 12/2004 Lynch et al. D14/345

* cited by examiner

Primary Examiner—Freda S. Nunn
(74) *Attorney, Agent, or Firm*—Hamilton & Terrile, LLP; Robert W. Holland

(57) **CLAIM**

The ornamental design for information handling system notebook, as shown and described.

DESCRIPTION

FIG. **1** is an angled full frontal perspective view of the information handling system notebook comprising the present invention;
FIG. **2** is a full frontal elevation view thereof;
FIG. **3** is a left side elevation view thereof;
FIG. **4** is a right side elevation view thereof;
FIG. **5** is a back plan view thereof;
FIG. **6** is a top plan view elevation thereof; and,
FIG. **7** is an angled front perspective view thereof in an open position.
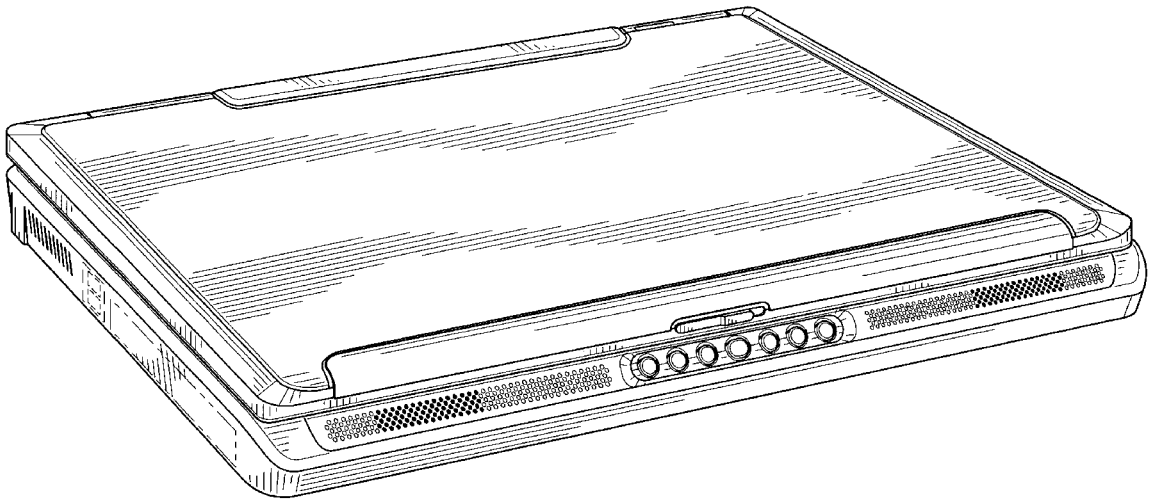
1 Claim, 4 Drawing Sheets