US009510728B2

(12) **United States Patent**
Tuller

(10) **Patent No.: US 9,510,728 B2**
(45) **Date of Patent: Dec. 6, 2016**

(54) **REDUCED VAPOR DRY SYSTEMS AND METHODS FOR DISHWASHERS**

(71) Applicant: **Whirlpool Corporation**, Benton Harbor, MI (US)

(72) Inventor: **Barry E. Tuller**, Stevensville, MI (US)

(73) Assignee: **Whirlpool Corporation**, Benton Harbor, MI (US)

(*) Notice: Subject to any disclaimer, the term of this patent is extended or adjusted under 35 U.S.C. 154(b) by 107 days.

(21) Appl. No.: **14/548,422**

(22) Filed: **Nov. 20, 2014**

(65) **Prior Publication Data**

US 2016/0143507 A1 May 26, 2016

(51) **Int. Cl.**
A47L 15/48 (2006.01)

(52) **U.S. Cl.**
CPC ***A47L 15/488*** (2013.01); ***A47L 15/483*** (2013.01); ***A47L 15/486*** (2013.01)

(58) **Field of Classification Search**
CPC A47L 15/00; A47L 15/42; A47L 15/48; F26B 19/00; F26B 21/00; F26B 21/06; B08B 3/00; D06F 58/00; D06F 58/20; D06F 58/23
USPC ..... 34/90, 595, 524, 497, 601, 606, 610; 68/5 C, 5 R, 19, 20; 134/58 D, 95.2
See application file for complete search history.

(56) **References Cited**

U.S. PATENT DOCUMENTS

3,876,469 A 4/1975 Schimke
4,515,145 A * 5/1985 Tallman F24D 19/1084 126/109
4,709,488 A 12/1987 Anselmino et al.
5,875,802 A * 3/1999 Favaro A47L 15/483 134/102.3
7,103,992 B2 * 9/2006 Duden A47L 15/4291 134/102.3
7,222,439 B2 * 5/2007 Paintner A47L 15/0013 34/595
7,347,005 B2 * 3/2008 Cerruti A47L 15/486 134/95.2
7,367,134 B2 * 5/2008 Osvatic D06F 58/20 137/514
9,052,143 B2 * 6/2015 Janowski A47L 19/04
2007/0251552 A1 * 11/2007 Lee ..... A47L 15/4251 134/56 D
2008/0210279 A1 * 9/2008 Hildenbrand ..... A47L 15/0081 134/56 D
2008/0264455 A1 * 10/2008 Brewer A47L 15/483 134/95.2

(Continued)

FOREIGN PATENT DOCUMENTS

CH 683819 A5 5/1994
CH 1825800 A3 * 5/2008 ..... A47L 15/4246

(Continued)

Primary Examiner — Stephen Gravini

(57) **ABSTRACT**

An example vent assembly for a dishwasher having a tub at least partially defining a treating chamber, and an exhaust vent, includes a condenser having an outlet, and an inlet in fluid communication with the treating chamber, an ambient air cooling duct in thermal communication with the condenser, and having an outlet in fluid communication with the exhaust vent, a venturi having an inlet in communication with the outlet of the condenser, and an outlet in communication with the cooling duct, and a fan for flowing ambient air through the cooling duct, past the venturi, and out the exhaust vent.
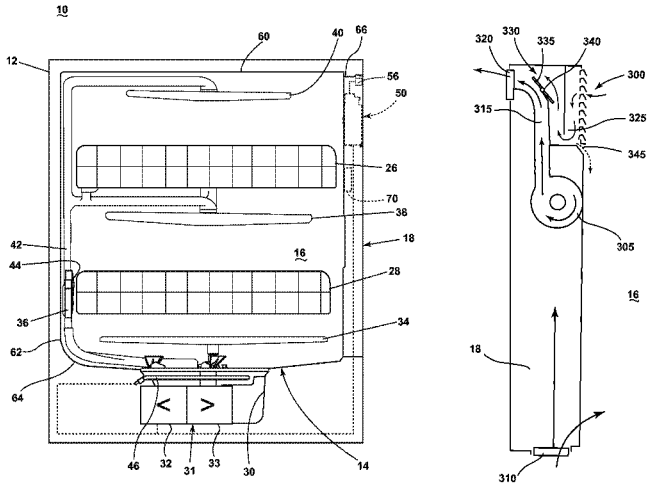
20 Claims, 3 Drawing Sheets