US008710728B2

(12) **United States Patent**
Ozolins et al.

(10) **Patent No.: US 8,710,728 B2**
(45) **Date of Patent: *Apr. 29, 2014**

(54) **BEZEL-LESS ELECTRONIC DISPLAY**

(75) Inventors: **Helmars E. Ozolins**, Orient, NY (US); **Masamichi Udagawa**, New York, NY (US)

(73) Assignee: **Bloomerg Finance L.P.**, New York, NY (US)

(*) Notice: Subject to any disclaimer, the term of this patent is extended or adjusted under 35 U.S.C. 154(b) by 0 days.

This patent is subject to a terminal disclaimer.

(21) Appl. No.: **13/588,223**

(22) Filed: **Aug. 17, 2012**

(65) **Prior Publication Data**

US 2012/0326576 A1 Dec. 27, 2012

Related U.S. Application Data

(63) Continuation of application No. 12/965,026, filed on Dec. 10, 2010, now Pat. No. 8,264,135, which is a continuation of application No. 11/932,128, filed on Oct. 31, 2007, now Pat. No. 7,859,181, which is a continuation of application No. 11/085,762, filed on Mar. 21, 2005, now Pat. No. 7,298,076, which is a continuation of application No. 10/300,648, filed on Nov. 20, 2002, now Pat. No. 6,919,678, which is a continuation-in-part of application No. 29/166,842, filed on Sep. 3, 2002, now Pat. No. Des. 500,037, and a continuation-in-part of application No. 29/166,843, filed on Sep. 3, 2002, now Pat. No. Des. 496,362, and a continuation-in-part of application No. 29/166,844, filed on Sep. 3, 2002, now Pat. No. Des. 496,363.

(51) **Int. Cl.**
H01J 31/00 (2006.01)
H01J 5/16 (2006.01)

(52) **U.S. Cl.**
USPC ..... **313/479**; 313/477 R; 313/110; 362/367; 220/2.1 R; 359/609

(58) **Field of Classification Search**
None
See application file for complete search history.

(56) **References Cited**

U.S. PATENT DOCUMENTS

3,909,525 A 9/1975 Fagan
D278,820 S 5/1985 Woodhall

(Continued)

FOREIGN PATENT DOCUMENTS

EP 0403760 A2 12/1990
EP 1209513 A2 5/2002

(Continued)

OTHER PUBLICATIONS

Bloomberg LP, "The Bloomberg® Flat Panel," brochure, Copyright 2000, 4 pages.

(Continued)

Primary Examiner — Ashok Patel
(74) *Attorney, Agent, or Firm* — Frank J. DeRose; Frommer Lawrence & Haug LLP

(57) **ABSTRACT**

A bezel-less display is disclosed that includes an electronic display device and a cover. The electronic display device has an image-displaying portion and another portion adjacent the image-displaying portion along at least one side. The cover is positioned adjacent the electronic display device and includes a first portion positioned adjacent the image-displaying portion of the display device and a second portion positioned adjacent the other portion of the display device. The optical properties of the first portion are also selected to transmit images displayed on the image-displaying portion and the optical properties of the second portion are selected to mask the other portion of the display device.
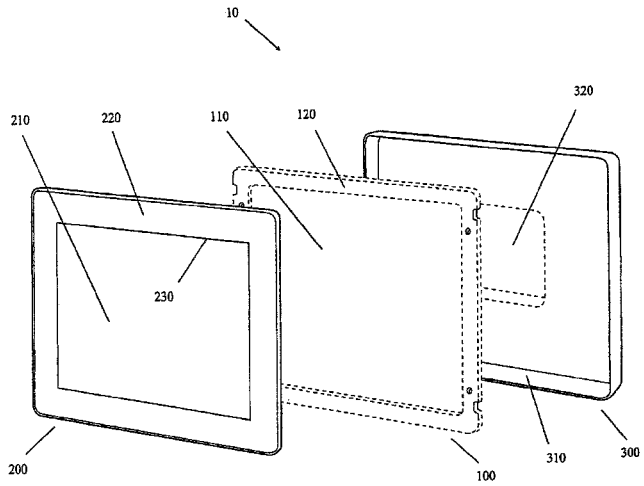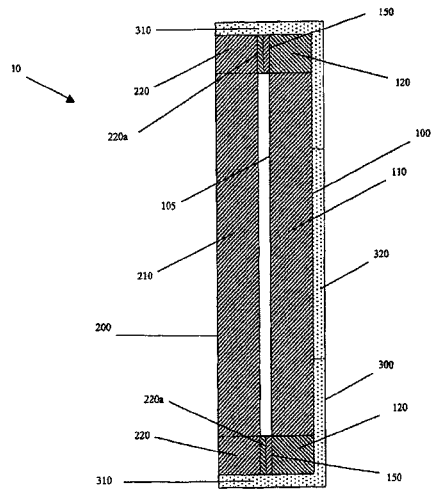
20 Claims, 10 Drawing Sheets