US009410428B2

(12) **United States Patent**
Lucas et al.

(10) **Patent No.: US 9,410,428 B2**
(45) **Date of Patent: Aug. 9, 2016**

(54) **TURBOMACHINE WITH CLAMP COUPLING SHAFT AND ROTOR HUB TOGETHER**

(71) Applicant: **United Technologies Corporation**, Hartford, CT (US)

(72) Inventors: **James L. Lucas**, Hamden, CT (US); **Matthew B. Kennedy**, Vernon, CT (US); **John E. Holowczak**, S. Windsor, CT (US); **William K. Tredway**, Manchester, CT (US); **Aavo Anto**, Bridgeport, CT (US)

(73) Assignee: **United Technologies Corporation**, Hartford, CT (US)

(*) Notice: Subject to any disclaimer, the term of this patent is extended or adjusted under 35 U.S.C. 154(b) by 896 days.

(21) Appl. No.: **13/726,946**

(22) Filed: **Dec. 26, 2012**

(65) **Prior Publication Data**

US 2014/0178196 A1 Jun. 26, 2014

(51) **Int. Cl.**

F01D 5/06	(2006.01)
F01D 5/02	(2006.01)
F01D 5/28	(2006.01)
F01D 5/34	(2006.01)

(52) **U.S. Cl.**

CPC ***F01D 5/025*** (2013.01); ***F01D 5/066*** (2013.01); ***F01D 5/284*** (2013.01); ***F01D 5/34*** (2013.01); *F05D 2260/37* (2013.01); *F05D 2300/175* (2013.01)

(58) **Field of Classification Search**

CPC F01D 5/284; F01D 5/025; F01D 5/005; F01D 5/066; F01D 5/021; F01D 5/081; F01D 5/087

See application file for complete search history.

(56) **References Cited**

U.S. PATENT DOCUMENTS

1,959,220	A *	5/1934	Robinson	F01D 5/021 403/365
3,905,723	A	9/1975	Torti, Jr.	
3,943,703	A *	3/1976	Kronogard	F01D 5/025 415/217.1
4,011,295	A	3/1977	Tree et al.	
4,011,737	A	3/1977	Kruger et al.	
4,076,456	A	2/1978	Tree et al.	
4,102,603	A	7/1978	Smith et al.	
4,123,199	A *	10/1978	Shimizu	F01D 5/066 416/198 A
4,176,519	A	12/1979	Kronogard	
4,247,256	A	1/1981	Maghon	
4,272,954	A	6/1981	Kronogard	
6,250,883	B1 *	6/2001	Robinson	F01D 5/025 416/198 A
6,431,781	B1	8/2002	Schenk	
2007/0177937	A1	8/2007	Holowczak et al.	
2007/0237646	A1 *	10/2007	Shi	F01D 5/025 416/244 A
2010/0290904	A1	11/2010	Wilson	

FOREIGN PATENT DOCUMENTS

EP	0052913	6/1982
EP	0112146	6/1984

OTHER PUBLICATIONS

International Search Report and Written Opinion for PCT Application No. PCT/US2013/076812, mailed Oct. 10, 2014.
International Preliminary Report on Patentability for PCT Application No. PCT/US2013/076812, mailed Jul. 9, 2015.
European Search Report for European Patent Application No. 13878483 completed Dec. 9, 2015.
* cited by examiner

Primary Examiner — Dwayne J White
Assistant Examiner — Joshua R Beebe
(74) *Attorney, Agent, or Firm* — Carlson, Gaskey & Olds, P.C.

(57) **ABSTRACT**

A turbomachine includes a rotor hub that has a central opening there through. A shaft extends through the central opening. A clamp is coupled with the shaft and the rotor hub such that the rotor hub is rotatable with the shaft.
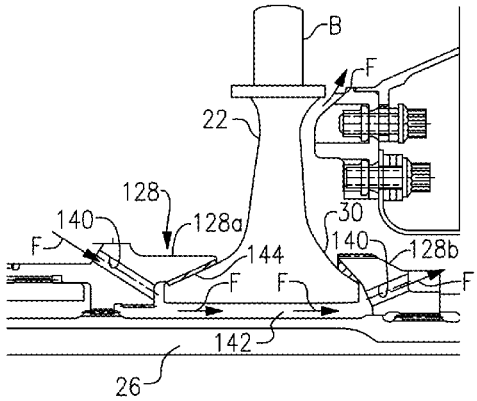
15 Claims, 1 Drawing Sheet