US006107628A

United States Patent [19]

Smith et al.

[11] **Patent Number: 6,107,628**

[45] **Date of Patent: Aug. 22, 2000**

[54] **METHOD AND APPARATUS FOR DIRECTING IONS AND OTHER CHARGED PARTICLES GENERATED AT NEAR ATMOSPHERIC PRESSURES INTO A REGION UNDER VACUUM**

[75] Inventors: **Richard D. Smith**, Richland; **Scott A. Shaffer**, Seattle, both of Wash.

[73] Assignee: **Battelle Memorial Institute**, Richland, Wash.

[21] Appl. No.: **09/090,896**

[22] Filed: **Jun. 3, 1998**

[51] **Int. Cl.**[7] **H01J 49/42**

[52] **U.S. Cl.** ..... **250/292**; 250/396 R

[58] **Field of Search** ..... 250/292, 291, 250/290, 396 R, 281, 282, 288

[56] **References Cited**

U.S. PATENT DOCUMENTS

3,501,631	3/1970	Arnold	250/41.9
3,560,734	2/1971	Barnett et al.	250/41.9
3,683,194	8/1972	Levin et al.	250/213
3,932,786	1/1976	Campbell	315/313
4,209,696	6/1980	Fite	250/281
4,531,056	7/1985	Labowsky et al.	250/288
4,542,293	9/1985	Fenn et al.	250/288
4,667,111	5/1987	Glavish et al.	250/492.2
5,120,958	6/1992	Davis	250/292
5,130,538	7/1992	Fenn et al.	250/282
5,179,278	1/1993	Douglas	250/290
5,206,506	4/1993	Kirchner	250/281
5,397,959	3/1995	Takahashi et al.	315/314
5,572,035	11/1996	Franzen	250/396
5,811,800	9/1998	Franzen et al.	250/292
5,818,055	10/1998	Franzen	250/292

FOREIGN PATENT DOCUMENTS

0027037	4/1981	European Pat. Off. .
0283941	9/1988	European Pat. Off. .
0369101	5/1990	European Pat. Off. .
0513909	11/1992	European Pat. Off. .
7-22617	8/1995	Japan .

OTHER PUBLICATIONS

DJ Douglas, JB French, Collisional Focusing Effect in Radio Frequency Quarupoles, J Am Soc Mass Spectrom 1992, 3, 398–408.

D Gerlich, Inhomogeneous RF Fields: A Versatile Tool for the Study of Processes With Slow Ions, 1992 John Wiley & Sons, Inc.

Primary Examiner—Kiet T. Nguyen
Attorney, Agent, or Firm—Stephen R. May

[57] **ABSTRACT**

A method and apparatus for focusing dispersed charged particles. More specifically, a series of elements within a region maintained at a pressure between 10^{-1} millibar and 1 bar, each having successively larger apertures forming an ion funnel, wherein RF voltages are applied to the elements so that the RF voltage on any element has phase, amplitude and frequency necessary to define a confinement zone for charged particles of appropriate charge and mass in the interior of the ion funnel, wherein the confinement zone has an acceptance region and an emmitance region and where the acceptance region area is larger than the emmitance region area.
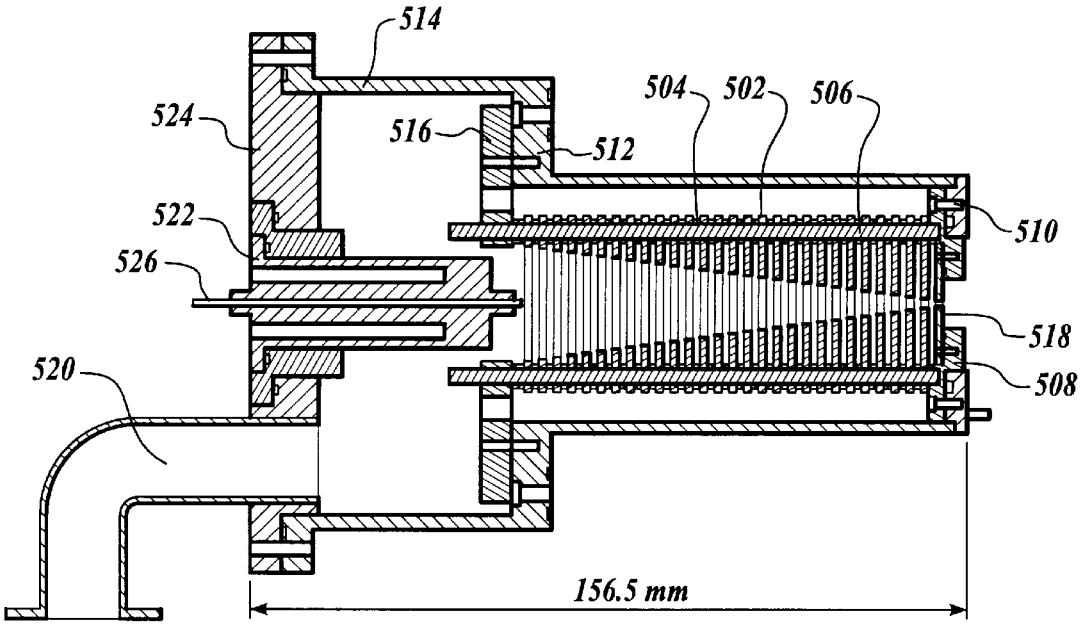
23 Claims, 12 Drawing Sheets