United States Patent [19]

Ferris

[11] **4,406,428**

[45] **Sep. 27, 1983**

[54] **CAMOUFLAGED AIRCRAFT**

[76] Inventor: **Carlisle K. Ferris,** 50 Moraine Rd., Morris Plains, N.J. 07950

[21] Appl. No.: **152,300**

[22] Filed: **May 22, 1980**

[51] **Int. Cl.**[3] **B64F 5/00**

[52] **U.S. Cl.** ..... **244/1 R;** 89/36 R; 428/919; 353/28; 434/88

[58] **Field of Search** ..... 244/1 R, 120, 121; 427/262, 267, 274, 280; 428/195, 919; 114/15; 89/36 R, 36 Z; 354/290, 291, 354; 355/77; 353/28; 352/40, 43; 434/85, 88

[56] **References Cited**

U.S. PATENT DOCUMENTS

1,045,152	11/1912	Kelsey	244/129.3
2,083,472	6/1937	Reed	434/85
2,190,691	2/1940	Barclay	114/15
2,759,814	8/1956	Kegeles	355/77
3,690,600	9/1972	Cooper	244/120
3,800,441	4/1974	Macpherson	434/85
4,076,398	2/1978	Galbraith	353/28
4,089,491	5/1978	Ferris	244/1 R
4,102,734	7/1978	Schiffman	355/77
4,212,440	7/1980	Ferris	244/1 R

OTHER PUBLICATIONS

Bell, "A-10 Colors", *Pri-Fly Presents,* Aug. 1978, pp. 1-16.

Primary Examiner—Galen L. Barefoot
Attorney, Agent, or Firm—Shlesinger, Arkwright, Garvey & Fado

[57] **ABSTRACT**

A camouflaged and deceptive preception distorted aircraft comprising an aircraft fuselage with nose tail top bottom and side surfaces having a real cockpit canopy on the top surface with length, width and height dimensions and a simulated cockpit canopy on the bottom surface positioned substantially in the same general area as the real cockpit canopy so that only one of the cockpit canopies is visible when the aircraft is perceived directly above the top surface or directly below the bottom surface, the simulated cockpit canopy having dimensions simulating the length, width and height of the real cockpit canopy, and at least one of the simulated cockpit canopy dimensions being greater than the corresponding length, width or height dimension of the real cockpit canopy; and the method for producing the simulated cockpit canopy.
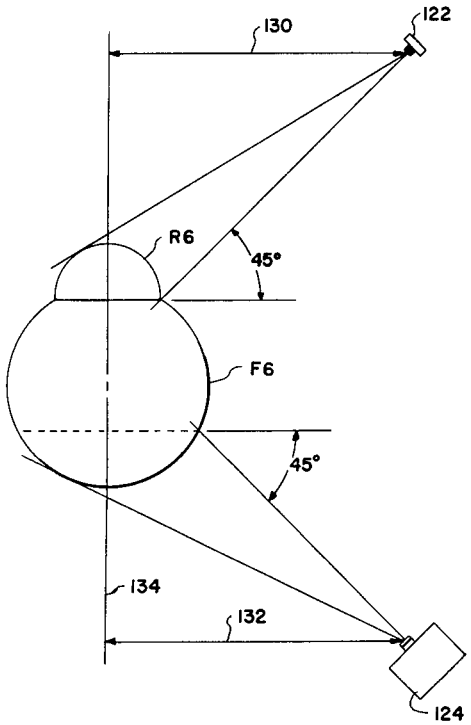
4 Claims, 14 Drawing Figures