United States Patent [19]

Deeg et al.

[11] **3,996,627**

[45] **Dec. 14, 1976**

[54] **ARTIFICIAL INTRAOCULAR LENS**

[75] Inventors: **Emil W. Deeg**, Woodstock, Conn.; **Robert E. Graf; David A. Krohn**, both of Southbridge, Mass.

[73] Assignee: **American Optical Corporation**, Southbridge, Mass.

[22] Filed: **Sept. 22, 1975**

[21] Appl. No.: **615,276**

[52] **U.S. Cl.** ..... **3/13**; 106/54; 106/52; 106/47 Q; 106/163; 351/167

[51] **Int. Cl.**[2] **A61F 1/16**

[58] **Field of Search** ..... 106/47 Q, 54, 52; 3/13; 351/159, 163

[56] **References Cited**

UNITED STATES PATENTS

3,790,260	2/1974	Boyd et al.	351/159
3,898,093	8/1975	Faulstich et al.	106/54
3,922,728	12/1975	Krasnov	3/13
3,925,825	12/1975	Richards et al.	3/13

OTHER PUBLICATIONS

Weyl, W. A. – *Coloured Glasses* – Dawson's of Pall Mall, London (1959) QD 139 G5, pp. 129–131, 229–234.

Troutman, R. C. – "Artiphakia & Aniseikonia" – Am. J. of Ophthalmology 56 (2) Oct. 1963 (pp. 602–639); 3–13.

Primary Examiner—Helen M. McCarthy
Attorney, Agent, or Firm—H. R. Berkenstock, Jr.; William C. Nealon

[57] **ABSTRACT**

A chemically durable, inert optical implant lens and glass composition for the manufacture of same.
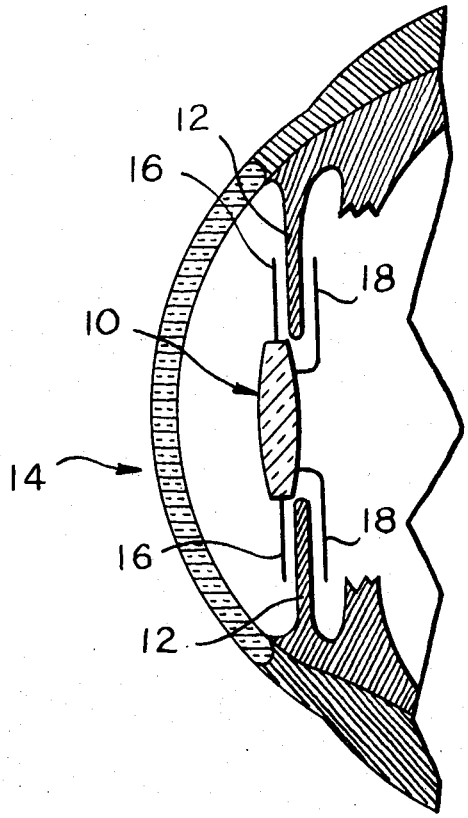
10 Claims, 2 Drawing Figures